Greenfire® GF40

OWNER'S & INSTALLATION MANUAL

Freestanding Pellet Stove

PLEASE READ THIS ENTIRE MANUAL BEFORE INSTALLATION AND USE OF THIS PELLET-BURNING ROOM HEATER. FAILURE TO FOLLOW THESE INSTRUCTIONS COULD RESULT IN PROPERTY DAMAGE, BODILY INJURY OR EVEN DEATH.

Contact your building or fire officials about restrictions and installation inspection requirements in your area.

WARNING:

Improper installation, adjustment, alteration, service or maintenance can cause injury, property damage, or loss of life. Refer to this manual. For assistance or additional information consult an authorized installer or service agency.

FOR YOUR SAFETY:

Do not store or use gasoline or other flammable vapours and liquids in the vicinity of this or any other appliance.

Installation and service must be performed by an authorized installer or service agency.

Tested by:

Intertek

4001609

***Installer*: Please complete the details on the back cover and leave this manual with the homeowner.**
***Homeowner:* Please keep these instructions for future reference.**

919-557c FPI FIREPLACE PRODUCTS INTERNATIONAL, LTD. 6988 Venture St., Delta, BC, Canada V4G 1H4 07.24.18

TO THE NEW OWNER

Congratulations! You are the owner of a state-of-the-art Pellet Stove.

Thank-you for purchasing a
FPI FIREPLACE PRODUCT.

The pride of workmanship that goes into each of our products will give you years of trouble-free enjoyment. Should you have any questions about your product that are not covered in this manual, please contact the GREENFIRE DEALER in your area.

Safety Note: If this stove is not properly installed, a house fire may result. For your safety, follow the installation instructions, contact local building, fire officials, or authority having jurisdiction about restrictions and installation inspection requirements in your area.

The authority having jurisdiction should be consulted before installation to determine the need to obtain a permit.

Rates: This manual describes the installation and operation of the Regency GF40 pellet heater. This heater meets the 2015 U.S. Environmental Protection Agency's wood emission limits for wood emission limits sold after May 15, 2015. Under specific test condition this heater has been shown to deliver heat at rates raging from 22,600-30,000 Btu/hr
Efficiency: 78%

FIRE EXTINGUISHER AND SMOKE DETECTION: All home with a pellet burning stove should have at least one fire extinguisher in a central location known to all the household. Smoke detectors and carbon monoxide detectors should be installed maintained in the room containing the stove. If it sounds the alarm, correct the cause but do not deactivate. You may choose to relocate the smoke the smoke detection device within the room; **DO NOT REMOVE THE SMOKE OR CARBON MONOXIDE DETECTORS FROM THE ROOM.**

WARNING: This wood heater needs periodic inspection and repair for proper operation. It is against federal regulation to operate this wood heater in a manner inconsistent with operating instructions in this manual.
WARNING: This wood heater has a manufacturer set minimum low burn rate that must not be altered. It is against federal regulations to alter this setting or other wise operate this wood heater in a manner inconsistent with operating instructions in this manual.

WARNING: Cancer and Reproductive Harm
www.P65Warnings.ca.gov
919-874

DIMENSIONS

Unit dimensions 4

SAFETY LABEL

Copy of Serial No. Decal 4

INSTALLATION

Introduction 6
Important Safety Information 6
Safety Warnings & Recommendations 7
Copy of the Safety Decal 9
Locating your pellet stove 10
Unpacking and Removing Pellet Stove From Pallet. ... 10
Clearances to Combustibles 12
Alcove clearances 12
Vent Termination Requirements 13
Exhaust and Intake Locations 14
Mobile Home Installation 15
Corner Through Wall Installation 15
Horizontal Exhaust Through Wall Installation: 16
Through Wall Vertical Rise Horizontal Termination Installation - Freestanding:: 17
Inside Vertical Installations: 18
Outside Vertical Installations: 18
Hearth Mount Installation: 19
Thermostat Install: 20

OPERATING INSTRUCTIONS

Automatic Safety Features 21
Operating Your Pellet Stove 21
Turning Your Pellet Stove Off 21
Guidelines for Fuel Quality 21
Damper Set-up 21

MAINTENANCE

Routine Cleaning & Maintenance 23
Troubleshooting 28
Wiring Diagram 31

PARTS

Parts List 32
Parts 33

WARRANTY

Warranty 36

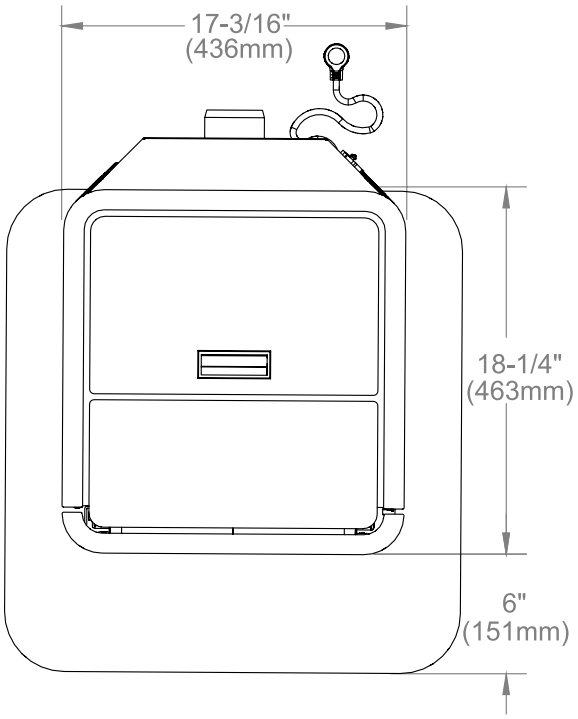

Weight (with full hopper): 280 lb (127 Kg)

Hopper Capacity: up to 67 lb (28 Kg)

Voltage: 110 - 120 V

Max Current: 4.1 Amps

Consumption on High: 3.1 lb/hr (1.4 Kg/hr)*

Consumption on Low: 1.3 lb/hr (0.6 Kg/hr)*

(Note: Consumption will vary with the type of fuel used.)

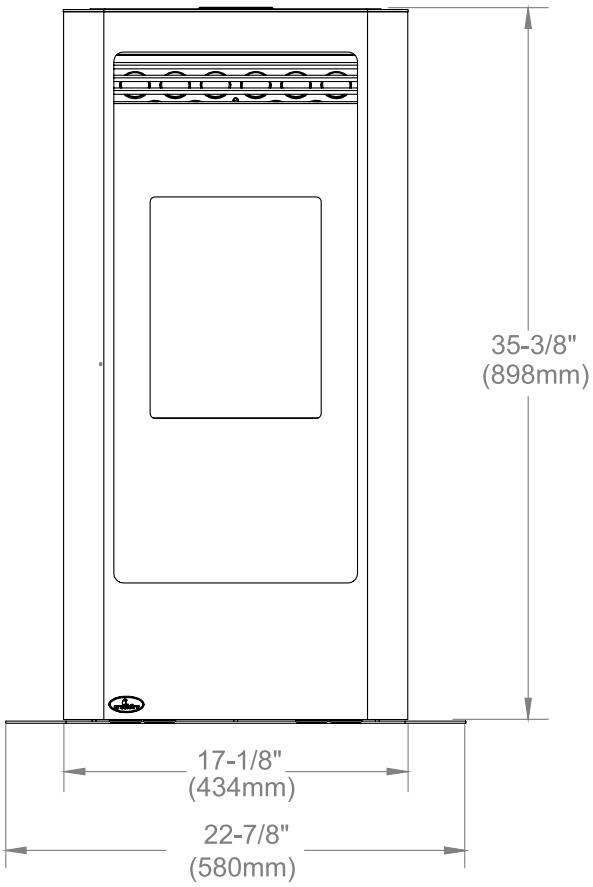

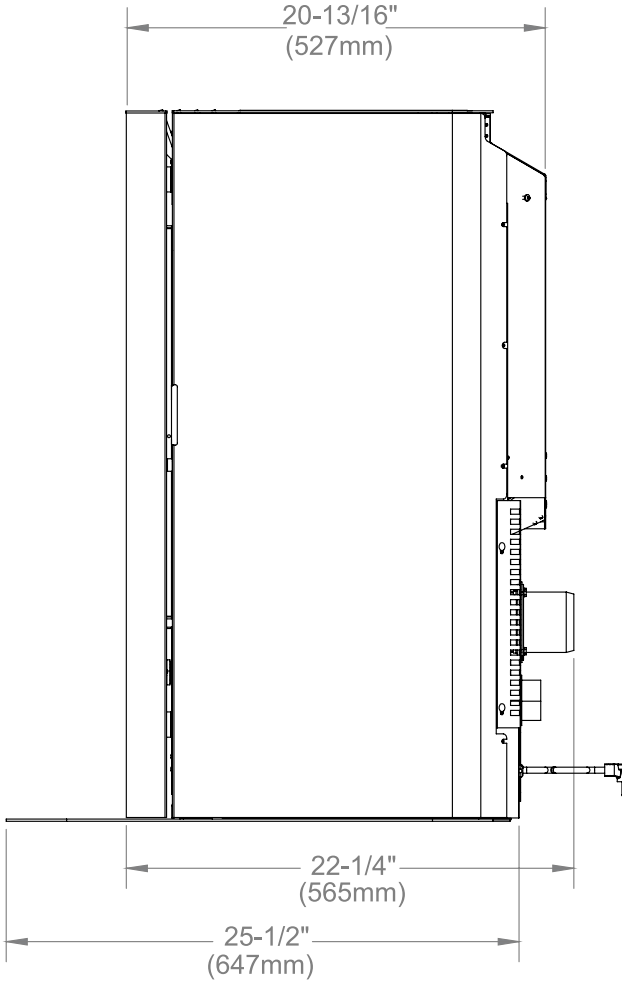

441

MODEL / MODELE: GF40
INPUT Rating: 8,000 to 30,000 BTU/Hr
LISTED ROOM HEATER, PELLETIZED FUEL ONLY
SUITABLE FOR MOBILE HOME INSTALLATION (CONCU POUR MAISON MOBILES)
Conforms to ASTM E1509-12, Certified to ULC S627-00

This pellet appliance has been tested and listed for use in manufactured homes in accordance with Oregon Administration Rules 814-23-900 through 814-23-909. Install and use only in accordance with the Manufacture's installation and operating instructions. Contact local building or fire officials about restrictions and installation inspection in your area. Do not connect this unit to a chimney flue serving another appliance. See local building codes and manufacturer's installation instructions for precautions required for passing a chimney through a combustible wall or ceiling. Do not obstruct space under heater. Electrical rating: 120 volts, 60 hz, 4.1 Amps. Route cord away from the heater.

/Cet appareil de boulette a été teste et repertoirie pour une utilisation dans les maisons pre fabriquées conformément aux reglements l'Administration d'Oregon Gouverne, 814-33-900 à 814-23-909. Installer et ulitiser uniquement conformément aux instructions d'installtion et d'utilisation du fabricant. Contacter les autories locales de la construction ou de la protection incendie pour vous informer sur les restrictions et l'inspection d'installtion dans votre region. Ne branchez pas cette unité sur un conduit de cheminée utilse pour un utre appereil. Consultez les codes de construction locaux et les instructions du fabricant pour les précautions necessaires pur faire passer une cheminée a travers un mur ou un plafold combustible. Ne pas obstruer l'espace sous chauffe.Le classement électrique : 120 volts, 60 hz, 4.1 Amplis. Maintenez le fil a l'ecart de l'apperreil de chauffage.

For Use With Only Pelletized Wood fuels. Operate only with viewing door and ash removal door tightly closed. Only replace broken glass with dealer certified ceramic glass. Listed type PL 3 inch (75 mm) or 4inch (100 mm) venting is required for installation. Other components required for installation: A listed pellet vent cap, Hearthpad; a listed single wall chimney liner may be used. Inspect and clean Exhaust Venting System frequently.

/Pour l'usage avec les combustibles sous forme de boulets uniquement. Fonctionner seulement avec la vue de porte et la porte d'enlèvement de cendre ont fermé. Seulement remplacer le verre avec le verre de ceramique. Les composants ont exigé pour l'installation: 3 pouce (75 mm) ou 4 pouce (100 mm) a énuméré le conduit de PL complète avec les composants. Les installations de mont de foyer ; un paquebot de cheminée de mur de seul énuméré peut être utilisé.

U.S. ENVIRONMENTAL PROTECTION AGENCY Certified to comply with 2015 particulate emission standards. Not approved for sale after May 15, 2020. AGENCE ÉTATS-UNIS PROTECTION DE L'ENVIRONNEMENT Certifié conforme aux normes 2015 d'émission de particules. Non approuvé pour la vente après le 15 mai à 2020.This pellet heater needs periodic inspection and repair for proper operation. Consult the owner`s manual for further information. It is against federal regulations to operate this pellet heater in a manner inconsistent with the operating instructions in the owner's manual. Ce poêle à bois doit inspection périodique et la réparation pour un fonctionnement correct. Consultez le manuel d'owner`s pour plus d'informations. Il est contre les règlements fédéraux pour faire fonctionner ce poêle à bois d'une manière incompatible avec les instructions de fonctionnement dans le manuel d'owner`s. This heater meets the 2015 U.S. Environmental Protection Agency's pellet emission limits for pellet emission limits sold after May 15, 2015. Under specific test conditions this heater has been shown to have a particulate emission level of 1.6 g/hr. Cet appareil de chauffage répond aux limites d'émission de bois de la US Environmental Protection Agency 2015 pour les limites d'émission de bois vendus après le 15 mai 2015. Dans des conditions de test spécifiques ce poêle a été montré pour avoir un niveau d'émission de particules de 1.6 g / h.

DATE OF MANUFACTURE / DATE DE FABRICATION:

J F M A M J J A S O N D 2015 2016 2017 2018 2019

CAUTION / ATTENTION: Moving Parts May Cause Injury. Do Not Operate Unit With Rear Grill Removed or Cabinet Sides Removed. / Pièces en mouvement peuvent causer des blessures. Ne pas l'appareil avec grille arrière supprimé ou Sides Cabinet supprimé.

CAUTION / ATTENTION: Hot Parts. Do Not Operate With Rear Grill Removed or Cabinet Sides Removed. / les pièces chaudes. Ne pas utiliser avec grille arrière supprimé ou Sides Cabinet supprimé.

DANGER / DANGER: Risk of Electric Shock. Disconnect Power Before Servicing. Refer to Owners manual for Electrical Wiring Connection Diagrams. / Risque de choc électrique. Débrancher l'alimentation avant entretien. Reportez-vous au manuel Propriétaires de Schémas de raccordement électrique et de câblage.

CAUTION / ATTENTION: Operate this unit with the hopper lid closed. Failure to do so may result in emission of products of combustion from the hopper under certain conditions. Maintain hopper seal in good condition. Do not overfill the hopper. / Utilisez cet appareil uniquement avec le couvercle de la trémie fermée. Ne pas le faire peut entraîner des émissions de produits de combustion de la trémie sous certaines conditions. Maintenir joint de trémie en bon état. Ne pas trop remplir la trémie.

LIGHTING INSTRUCTIONS / INSTRUCTIONS POUR L'ALLUMAGE:

- Press and release the Orange on / off button / Appuyez et relâchez Orange bouton marche / arrêt sous verre de la trémie.
- Set the mode and heat output to the desired setting. / Réglez le mode et puissance calorifique au réglage de...
- Ensure to close Hopper Lid. / Assurez-vous de fermer couvercle de trémie.

TO TURN THE UNIT OFF / POUR ETEINDRE L'UNITE:

- Press the on / off button, the LED's will turn off as indication. / Appuyez sur Orange bouton marche / arrêt, le LEDs se éteint comme indicateur.

(Refer to owners manual for detailed instructions / Referez-vous au guide de l'utilisation pou un mode d'emploi detaille.)

CAUTION:

Hot while in operation.
Do not touch, keep children clothing and furniture away.
-Contact may cause skin burns. See nameplate and instructions.

ATTENTION:

-Hot en cours de fonctionnement.
-Ne pas toucher, maintenir les enfants des vêtements et des meubles.
-Le contact peut provoquer des brûlures de la peau. Voir plaque signalétique et les instructions.

DO NOT REMOVE THIS LABEL / N'ENLEVEZ PAS CETTE ETIQUETTE

INSTALLED AS A FREESTANDING STOVE MODEL (FS) /A INSTALLE COMME UN MODELE SUR PIED DE POELE

Minimum clearances to combustible materials; conventional or mobile home./ Les dégagements minimums aux matériels combustibles; la maison conventionnelle ou mobile.

A) Sidewall to unit / De mur lateral à l'unité	8" (200 mm)
B) Backwall to unit / De mur du fond à l'unité	5.5" (140 mm)
C) Backwall to Chimney Connector / Paroi arrière au connecteur de cheminée	4" (100 mm)
D) Corner to unit / Du coin à l'unité	3" (75 mm)

E) If supplied Hearth Pad is used no floor protection is required. If unit is installed on a combustible floor and the supplied Hearth Pad is not used the floor must be protected by a certified non-combustible Hearth Pad extending 6 inches (150 mm) in front of the glass. /Si fourni Foyers Pad est utilisé aucune protection de plancher est requise. Si l'appareil est installé sur un plancher combustible et le foyer Pad fourni n'est pas utilisé le sol doit être protégé par une plaque de foyer non combustible certifié s'étendant de 6 pouces (150 mm) à l'avant du verre.

ALCOVE
Largeur / Width Minimum
36" (915 mm)

Hauteur / Height Minimum
48" (1220 mm)

Profondeur / Depth Minimum
30" (760 mm)

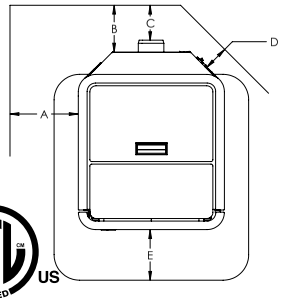

C ETL LISTED US
Intertek
4001609
Certified for use in Canada & USA / Certifié pour installation au Canada et aux Etats-Unis.

Manufactured in Canada for / Fabriqué dans le Canada pour:
FPI Fireplace Products International Ltd.
Delta, BC, Canada C-14562

SAMPLE

This is a copy of the safety label that accompanies each GF40 . We have printed a copy of the contents here for your reference.

On the GF40 the safety label is located on the underside of the hopper lid.

Introduction

Important Safety Data:

Please read this entire Owner's Manual before installing or operating your Regency Pellet Stove. Failure to follow these instructions may result in property damage, bodily injury or even death. Any unauthorized modification of the appliance or use of replacement parts not recommended by the manufacturer is prohibited.

Contact your local building or fire official to obtain a permit and any information on installation restrictions and inspection requirements for your area. All local regulations, including those referring to national and European Standards need to be complied with when installing this appliance.

To prevent the possibility of a fire, ensure that the appliance is properly installed by adhering to the installation instructions. An Regency dealer will be happy to assist you in obtaining information with regards to your local building codes and installation restrictions.

The stove's exhaust system works with negative combustion chamber pressure and a slightly positive chimney pressure. It is very important to ensure that the exhaust system be sealed and airtight. The ash pan and viewing door must be locked securely for proper and safe operation of the pellet stove. Operating with door open could cause a fire inside the house as well as the release of carbon monoxide into the living space.

Carbon monoxide is a colorless and odorless gas, to prevent it from poisoning you or your family know the symptoms of carbon monoxide poisoning: headache, dizziness, weakness, sleepiness, nausea, vomiting, and confusion. Carbon monoxide reduces the blood's ability to carry oxygen. Low blood oxygen levels can result in loss of consciousness and death.

Do not burn with insufficient combustion air. A periodic check is recommended to ensure proper combustion air is admitted to the combustion chamber. Setting the proper combustion air is achieved by adjusting the slider damper located on the left side of the stove.

When installing the stove in a mobile home, it must be electrically grounded to the steel chassis of the home and bolted to the floor. Make sure that the structural integrity of the home is maintained and all construction meets local building codes.

Consider all large air moving devices when installing your unit and provide room air accordingly. NOTE: Extractor fans when operating in the same room or space as the appliance, may cause problems. Limited air for combustion may result in poor performance, smoking and other side effects of poor combustion.

Soot or creosote may accumulate when the stove is operated under incorrect conditions such as an extremely rich burn (black tipped, lazy orange flames).

Be sure to maintain the structural integrity of your home when passing a vent through walls, ceilings, or roofs. It is recommended that the unit be secured into its position in order to avoid any displacement. This appliance must be installed on a floor with an adequate load bearing capacity. If an existing construction doesn't meet these prerequisite, suitable measures (e.g. load distributing plate) shall be taken to achieve it.

FRESH AIR: Outside Fresh Air connection is optional. Fresh Air must be connected to all units installed in Mobile Homes and Air Tight Homes (R2000) or where required by local codes.

If you have any questions with regards to your stove or the above-mentioned information, please feel free to contact your local dealer for further clarification and comments.

Safety Warnings And Recommendations:

Caution: Do not connect to any air distribution duct or system. Do not burn garbage or flammable fluids such as gasoline, naphtha or engine oil. Unit hot while in operation. Keep children, clothing and furniture away. Contact may cause skin burns.

Warning: Parts of the appliance, especially the external surfaces, will be hot to touch when in operation and due care will need to be taken. Never place wood, paper, furniture, drapes or other combustible materials within 80cm (31½") of the front of the unit, 20cm (7⅞") from each side, and 10cm (4") from the back of the unit. Do not let children or pets touch it when it is hot.

To prevent the possibility of a fire, ensure that the appliance is properly installed by adhering to the installation instructions. An Regency dealer will be happy to assist you in obtaining information with regards to your local building codes and installation restrictions.

FIRE EXTINGUISHER AND SMOKE DETECTION: All homes with a pellet burning stove should have at least one fire extinguisher in a central location known to all in the household. Smoke detectors should be installed and maintained in the room containing the stove when installing and operating a pellet burning appliance. If it sounds the alarm, correct the cause but do not deactivate. You may choose to relocate the smoke detection devise within the room; DO NOT REMOVE THE SMOKE DETECTOR FROM THE ROOM.

CHIMNEY OR RUN AWAY FIRE: Call local fire department (or dial 911). Close the draft fully. Examine the flue pipes, chimney, attic, and roof of the house, to see if any part has become hot enough to catch fire. If necessary, spray with fire extinguisher or water from the garden hose. IMPORTANT: Do not operate the stove again until you are certain the chimney and its lining have not been damaged.

FUEL: This pellet stove is designed and approved to only burn wood pellet fuel with up to 3% ash content. Dirty fuel will adversely affect the operation and performance of the unit and may void the warranty. Check with your dealer for fuel recommendations.

THE USE OF CORD WOOD IS PROHIBITED BY LAW.

SOOT and FLYASH: Formation and Need for Removal **-** The products of combustion will contain small particles of flyash. The flyash will collect in the exhaust venting system and restrict the flow of flue gases. Incomplete combustion, such as occurs during startup, shutdown, or incorrect operation of the room heater will lead to some soot formation which will collect in the exhaust venting system. The exhaust venting system should be inspected at least once every year to determine if cleaning is necessary.

CREOSOTE: When wood is slowly burned it produces tar and other organic vapours and these combine with expelled moisture to form creosote. The creosote vapours condense in the relatively cool chimney flue associated with a slow burning fire. As a result, creosote residue accumulates on the flue lining. When ignited this creosote can result in an extremely hot chimney fire.

CLEANING: There will be some build up of fly ash and small amounts of creosote in the exhaust. This will vary due to the ash content of the fuel used and the operation of the stove. It is advisable to inspect and clean the exhaust vent semi-annually or every two tons of pellets.

ASHES: Disposed ashes should be placed in a metal container with a tight fitting lid. The closed container of ashes should be on a non-combustible floor on the ground, well away from all combustible materials pending final disposal. If the ashes are disposed of by burial in soil or otherwise locally dispensed, they should be retained in the closed container until all cinders have been thoroughly cooled.

ELECTRICAL: The use of a surge protected power bar is recommended. The unit must be grounded. The grounded electrical cord should be connected to a standard 110-120 volts, nominal average 2.0 Amps (4.1 Amps peak), 60 hertz electrical outlet and also must be accessible. Ensure the polarity to the outlet the unit will be plugged into is correct as incorrect polarity can affect the unit's operation. If this power cord should become damaged, a replacement power cord must be purchased from the manufacturer or a qualified Regency dealer. Be careful that the electrical cord is not trapped under the appliance and that it is clear of any hot surfaces or sharp edges. This unit's maximum power requirement is 184 watts (600 watts peak).

GLASS: Do not abuse the glass by striking or slamming the door. Do not attempt to operate the stove with broken glass. The stove uses ceramic glass. Replacement glass must be purchased from an Regency dealer. Do not attempt to open the door and clean the glass while the unit is in operation or if glass is hot. To clean the glass, use a soft cotton cloth and mild window cleaner, gas or wood stove glass cleaner, or take a damp paper towel and dip into the fly ash. This is a very mild abrasive and will not damage the glass.

FLAMMABLE LIQUIDS: Never use gasoline, gasoline-type lantern fuel, kerosene, charcoal lighter fluid, or similar liquids to start or "freshen up" a fire in the heater. Keep all such liquids well away from the heater while it is in use.

SMOKE DETECTOR: Smoke detectors should be installed and maintained in the structure when installing and operating a pellet burning appliance.

OPERATION: The ash pan and door must be closed securely for proper and safe operation of the pellet stove. Also ensure all gaskets on the door are checked and replaced when necessary.

KEEP ASH PAN FREE OF RAW FUEL.

Do not lace unburned fuel or new fuel in ash pan. A fire in the ash pan may occur.

INSTALLATION: Be sure to maintain the structural integrity of your home when passing a vent through walls, ceilings, or roofs. It is recommended that the unit be secured into its position in order to avoid any displacement.

DO NOT INSTALL A FLUE DAMPER IN THE EXHAUST VENTING SYSTEM OF THIS UNIT.

DO NOT CONNECT THIS UNIT TO A CHIMNEY FLUE SERVING ANOTHER APPLIANCE.

FRESH AIR: Outside Fresh Air connection is optional. Must be connected to all units installed in Mobile and "Air Tight Homes" (R2000) or where required by local codes. Consider all large air moving devices when installing your unit and provide fresh air accordingly. Limited air for combustion may result in poor performance, smoking and other side effects of poor combustion.

If you have any questions with regards to your stove or the above-mentioned information, please feel free to contact your local dealer for further clarification and comments.

FPI HAS NO CONTROL OVER THE INSTALLATION OF YOUR STOVE, FPI GRANTS NO WARRANTY IMPLIED OR STATED FOR THE INSTALLATION OR MAINTENANCE OF YOUR STOVE. THEREFORE, FPI ASSUMES NO RESPONSIBILITY FOR ANY CONSEQUENTIAL DAMAGE(S).

SAVE THIS INSTRUCTION MANUAL FOR FUTURE REFERENCE

Safety Decal Location

The Safety Decal is located on the back of the outer door near the bottom.

Pellet Quality:

Pellet quality is important, please read the following:

Your Regency pellet stove has been designed to burn wood pellets only. Do not use any other type of fuel, as this will void any warranties stated in this manual.

The performance of your pellet stove is greatly affected by the type and quality of wood pellets being burned. As the heat output of various quality wood pellets differs, so will the performance and heat output of the pellet stove.
CAUTION: It is important to select and use only pellets that are dry and free of dirt or any impurities such as high salt content. Dirty fuel will adversely affect the operation and performance of the unit and will void the warranty. Pellet Fuel Industries (P. F. I.) has established standards for wood pellet manufacturers. We recommend the use of pellets that meet or exceed these standards. Ask your dealer for a recommended pellet type.

P. F. I. PELLET STANDARDS:

Fines (fine particles).....1% maximum through a ⅛" screen
Bulk Density.....40 pound per cubic foot minimum
Size.....¼" to 5/16" diameter ½ – 1½" long maximum
Ash Content.....1% maximum (Premium grade)
..... 3% maximum (Standard grade)
Moisture Content.....8% maximum
Heat Content.....approximately 8200 BTU per pound minimum

ASH: The ash content of the fuel and operation of your stove will directly determine the frequency of cleaning. The use of high ash fuels may result in the stove needing to be cleaned daily. A low ash fuel may allow longer intervals between cleaning.

CLINKERING: [clinkers are silica (sand) or other impurities in the fuel that will form a hard mass during the burning process]. This hard mass will block the air flow through the Burn Pot Liner and affect the performance of the stove. Any fuel, even approved types, may tend to clinker. Check the Burn-Pot Liner daily to ensure that the holes are not blocked with clinkers. If they become blocked, remove the liner (when the unit is cold) and clean/scrape the clinkers out. Clean the holes with a small pointed object if required. Refer to the section Routine Cleaning and Maintenance.

PELLET FEED RATES: Due to different fuel densities and sizes, pellet feed rates may vary. This may require an adjustment to the slider damper setting or to the auger feed trim setting on low.

Since FPI has no control over the quality of pellets that you use, we assume no liability for your choice in wood pellets.

Store pellets in a dry area at least 36" (1 m) away from the pellet stove.

Deciding Where to Locate your Pellet Appliance:

1. Check the "Clearances to Combustibles" section for proper spacing.
2. Do not obtain combustion air from an attic, garage or any unventilated space. Combustion air may be obtained from a ventilated crawl space.
3. Do not install the stove in a bedroom.
4. You can vent the stove through an exterior wall behind the unit or connect it to an existing masonry or metal wood stove chimney (must be lined if the chimney is over 6" (15 cm) diameter, or over 28 inches² (180 cm²) cross sectional area). An interior vent can be used with approved pipe passing through the ceiling and roof.
5. Locate the stove in a large and open room that is centrally located in the house. This will optimize heat circulation.
6. The power cord is 8 feet (2.43 m) long and may require a grounded extension cord to reach the nearest electrical outlet.
7. Stove must sit on a non-combustible pad that extends six inches in front of the door or the included hearth pad (GF40-025).

NATIONAL FIREPLACE INSTITUTE
NFI
CERTIFIED
www.nficertified.org

We recommend that our pellet hearth products be installed and serviced by professionals who are certified in the U.S. by the National Fireplace Institute® (NFI) as NFI Pellet Specialists or who are certified in Canada by Wood Energy Technical Training (WETT).

Wood Energy Technical Training
www.wettinc.ca

Removing Your Pellet Stove From the Crate

1. Start by removing the crating and unit bag, you will need a pry bar and hammer to remove the crating. A sawzall can be used to remove the crating by cutting the staples.

2. Open or Remove the outer door for easy access to screws securing unit to pallet.

3. Loosen/remove six T-20 screws securing Back Grill, once loose slide downwards and remove.

4. Use a 7/16 wrench or socket to remove the three shipping bolts holding the unit to the pallet, see Figure 1.

5. Brackets used to hold down the front of the stove can be recycled once removed.

Tools Required:
-T-20 screwdriver or drill bit
-7/16" Wrench or Socket

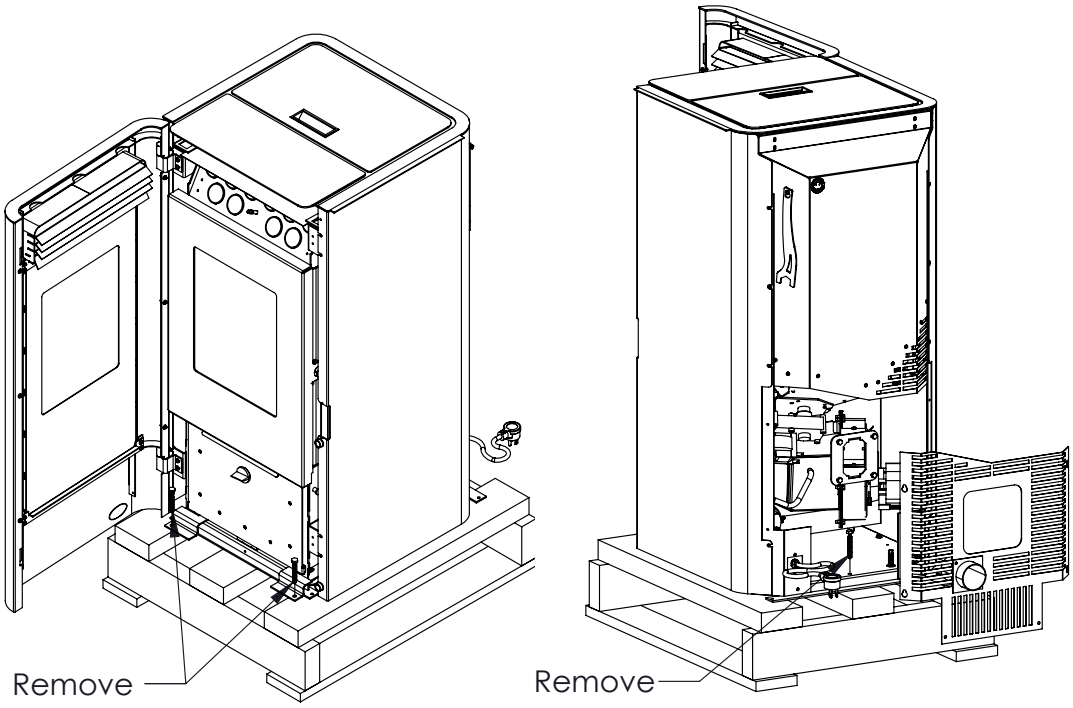

Figure 1: Shipping Bolt Removal

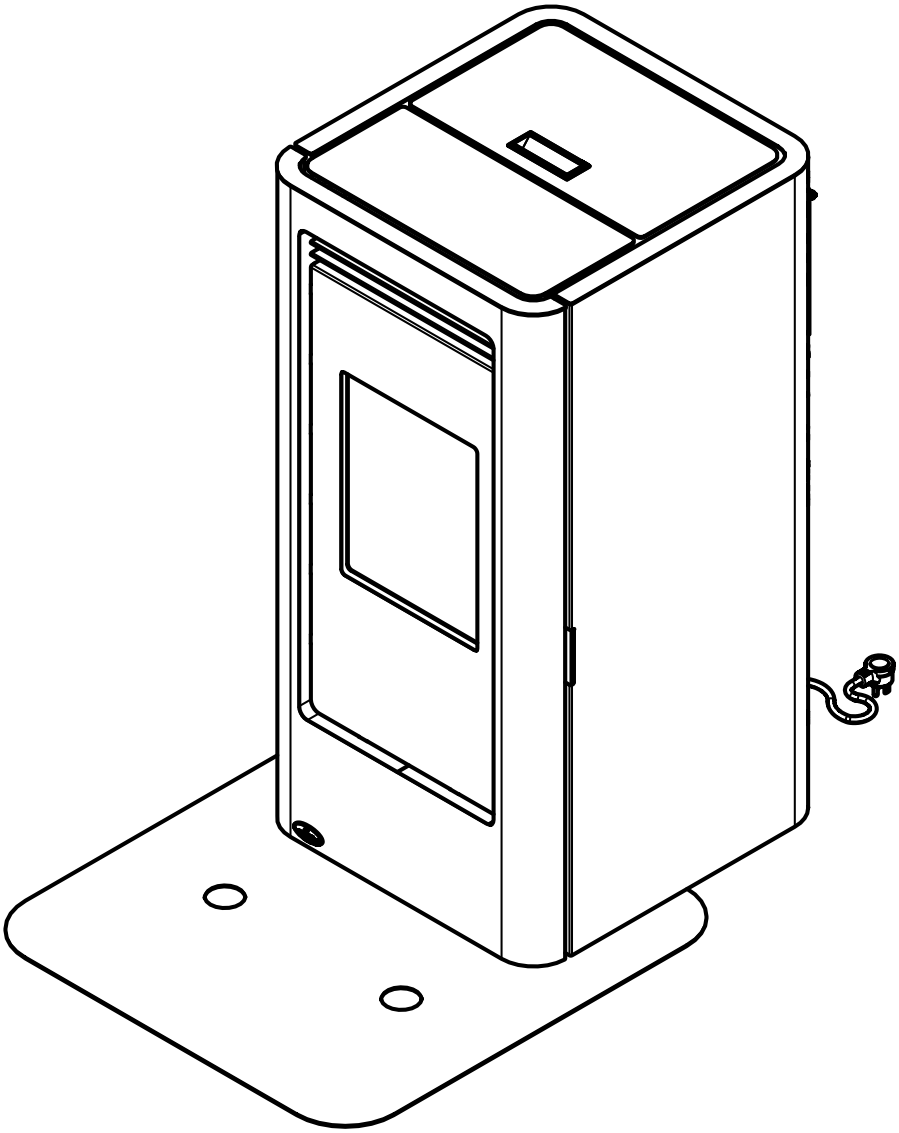

Figure 2: Hearth Pad Install

Clearances to Combustibles:

IMPORTANT: The GF40 must have a Hearth Pad when installing the unit on a combustible floor. The included hearth pad meet all the requirement of a proper hearth pad. If you do not use the included hearth pad a certified non combustible Hearth Pad with a minimum R Value of at least 0.84 must be placed underneath the unit and extend six inches in front of the unit measured from the glass. If the GF40 is installed on carpet the use of a solid non combustible Hearth Pad must be used under leveling legs.

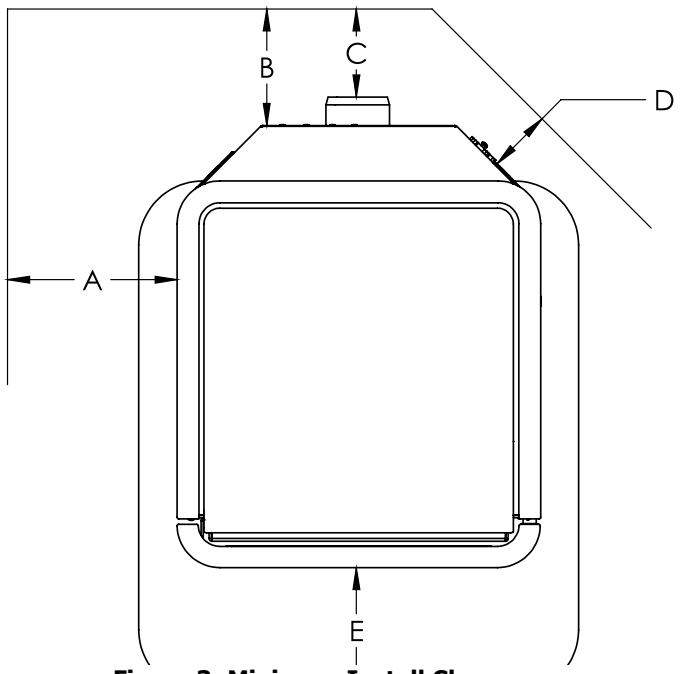

Figure 3: Minimum Install Clearances

These dimensions are minimum clearances but it is recommended that you ensure sufficient room for servicing, routine cleaning and maintenance.

A. Side wall to unit	8 inches	(200 mm)
B. Back wall to unit	5.5 inches	(140 mm)
C. Back wall to Chimney Connector	4 inches	(100mm)
D. Corner to unit	3 inches	(75 mm)
E. Glass to Hearth Pad	6 inches	(150 mm)

Alcove Clearances:

The unit may be installed in an alcove if desired. These minimum clearances to combustibles must be maintained at all times. Be sure to leave room for servicing, routine cleaning, and maintenance. These are inside dimensions.

Minimum Alcove Width	36 inches (915 mm)
Minimum Alcove Height	48 inches (1220 mm)
Minimum Alcove Depth	30 inches (762 mm)

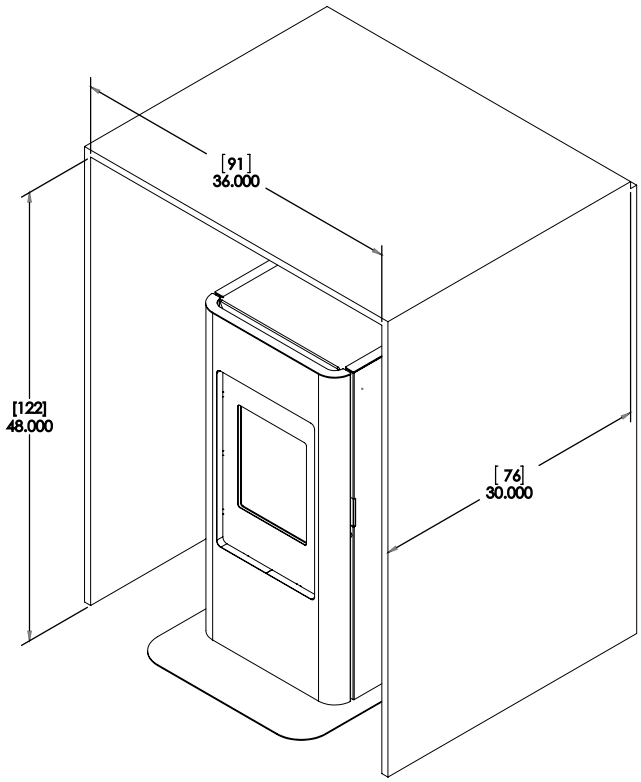

Figure 4: Minimum Alcove Clearances

Vent Termination Requirements:

IT IS HIGHLY RECOMMENDED THAT YOUR PELLET STOVE BE INSTALLED BY AN AUTHORIZED DEALER/INSTALLER.

Table 1: Use in conjunction with Figure 6 for allowable exterior vent termination locations.

Letter	Minimum Clearance	Description
A	24 in (61 cm)	Above grass, top of plants, wood, or any other combustible materials.
B	48 in (122 cm)	Beside/below any door or window that may be opened. (18" (46 cm) if outside fresh air installed.)
C	12 in (30 cm)	Above any door or window that may be opened. (9" (23 cm) if outside fresh air installed.)
D	24 in (61 cm)	To any adjacent building, fences and protruding parts of the structure.
E	24 in (61 cm)	Below any eave or roof overhang
F	12 in (30 cm)	To outside corner.
G	12 in (30 cm)	To inside corner, combustible wall (vertical and horizontal terminations).
H	3 ft (91 cm) within a height of 15 ft (4.5 m) above the meter/regulator assembly	To each side of center line extended above natural gas or propane meter/ regulator assembly or mechanical vent.
I	3 ft (91 cm)	From any forced air intake of other appliance
J	12 in (30 cm)	Clearance to non-mechanical air supply inlet to building, or the combustion air inlet to any appliance.
K	24 in (61 cm)	Clearance above roof line for vertical terminations.
L	7 ft (2.13 m)	Clearance above paved sidewalk or paved driveway located on public property.

1. Do not terminate the vent in any enclosed or semi-enclosed areas such as a carport, garage, attic, crawl space, narrow walkway, closely fenced area, under a sun deck or porch, or any location that can build up a concentration of fumes such as stairwells, covered breezeway, etc.
2. Vent surfaces can become hot enough to cause burns if touched by children. Non-combustible shielding or guards may be required.

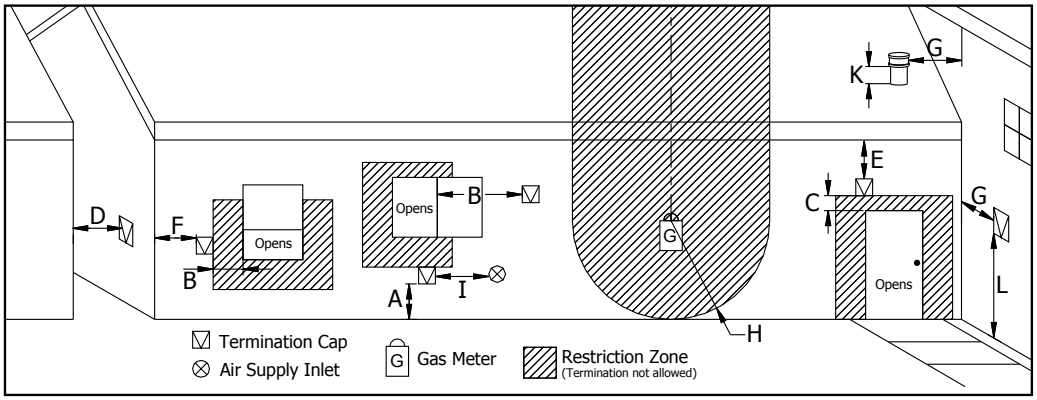

Figure 5: Use in conjunction with Table 1 for allowable exterior vent termination locations.

3. Termination must exhaust above the inlet elevation. It is recommended that at least five feet of vertical pipe be installed outside when the appliance is vented directly through a wall, to create some natural draft to prevent the possibility of smoke or odor during appliance shut down or power failure. This will keep exhaust from causing a nuisance or hazard from exposing people or shrubs to high temperatures. In any case, the safest and preferred venting method is to extend the vent through the roof vertically.
4. Distance from the bottom of the termination and grade is 12" (30 cm) minimum. This is conditional upon the plants and nature of grade surface. The exhaust gases are hot enough to ignite grass, plants and shrubs located in the vicinity of termination. The grade surface must not be lawn.
5. If the unit is incorrectly vented or the air to fuel mixture is out of balance, a slight discoloration of the exterior of the house might occur. Since these factors are beyond the control of FPI, we grant no guarantee against such incidents.

NOTE: Venting terminals shall not be recessed into walls or siding.

Outside Fresh Air Connection:

Outside fresh air is mandatory when installing this unit in airtight homes (R2000) and mobile homes.

A Fresh-air intake is strongly recommended for all installations. Failure to install a fresh air intake may result in improper combustion as well as the unit smoking during power failures.

When connecting to an outside fresh air source, do not use plastic or combustible pipe. A 2" minimum (51 mm) ID (inside diameter) steel, aluminum or copper pipe should be used. It is recommended, when you are installing a fresh air system, to keep the number of bends in the pipe to a minimum.

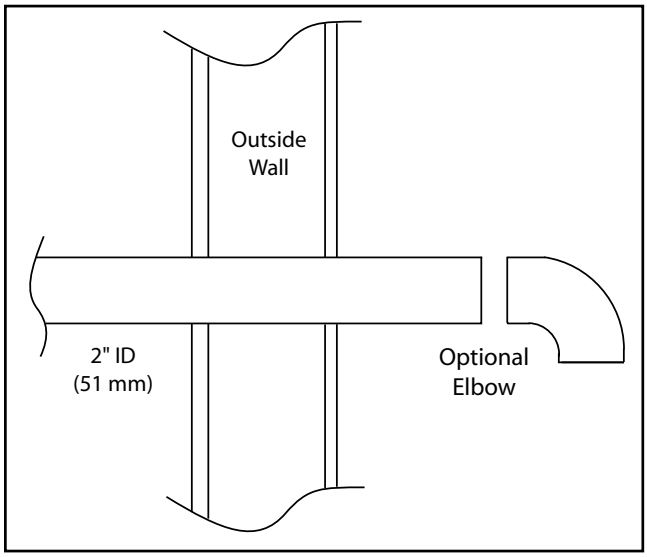

Figure 6: Outside Air Connection.

Exhaust and Intake Locations:

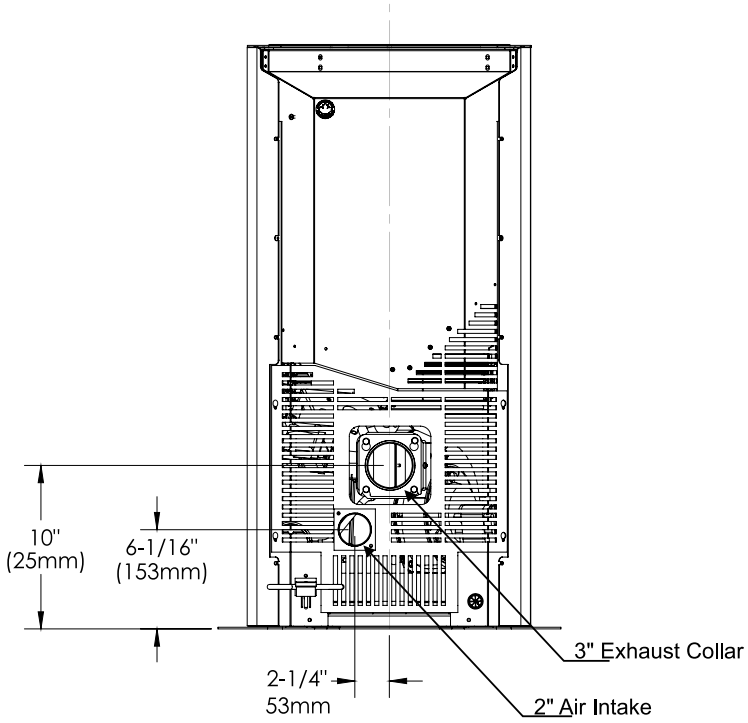

Figure 7: GF40 Inlet and Outlet Location.

EXHAUST

Base of unit to center of flue	10 in	(251 mm)
Center of unit to center of flue	0 in	(0 mm)
	[at center of unit]	

FRESH AIR INTAKE

Base of unit to center of intake	6 in	(153 mm)
Center of unit to center of intake	2-1/4 in	(53 mm)

IMPORTANT: When attaching the exhaust venting system to the unit or when joining vent sections three screw must be used at each joint. If vented horizontally, joints shall be made gas tight with aluminum foil duct tape. Heights may change if leveling legs are adjusted.

Mobile Home Installation:

- Secure the heater to the floor using the two holes in the base.
- Ensure the unit is electrically grounded to the chassis of your home (permanently).
- Do not install in a room people sleep in.
- Outside fresh air is mandatory. Secure outside air connections directly to fresh air intake pipe and secure with three screws evenly spaced.

CAUTION: THE STRUCTURAL INTEGRITY OF THE MANUFACTURED HOME FLOOR, WALL AND CEILING/ROOF MUST BE MAINTAINED.

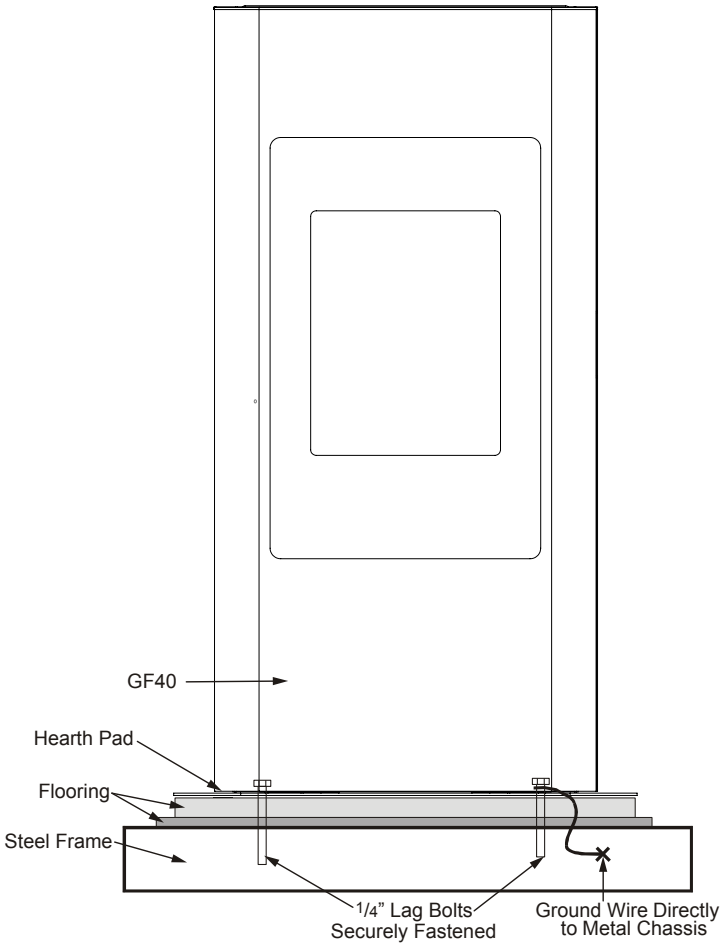

Figure 8: Mobile home installation.

Corner Through Wall Installation:

Minimum clearances must be maintained for a corner installation as shown in figure 9.

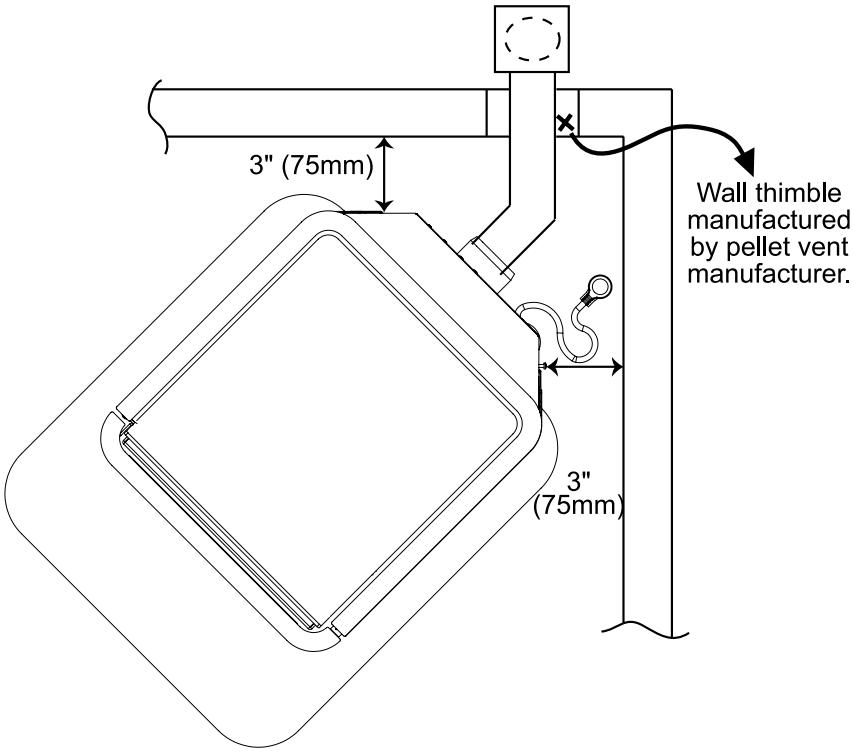

Figure 9: Corner Installation.

Horizontal Exhaust Through Wall Installation:

Vent installation: install vent at clearances specified by the vent manufacturer.

A chimney connector shall not pass through an attic or roof space, closet or similar concealed spaces, or a floor, or ceiling. Where passage through a wall or partition of combustible construction is desired, the installation shall conform to CAN/CSA-B365 Installation Code for Solid-Fuel-Burning Appliances and Equipment. Only use venting of L or PL type with an inside diameter of 3 or 4 inches (7.6 or 10.1 cm).

1. Choose a location for your stove that meets the requirements stated in this manual and allows installation with the least amount of interference to house framing, plumbing, wiring, etc.
2. Install a non-combustible hearth pad (where necessary).
3. Place the appliance 15" (37.5 cm) away from the wall. If the stove is to be set on a hearth pad, set the unit on it, and adjust the leveling legs.
4. Locate the center of the exhaust pipe on the stove. Extend that line to the wall. Once you have located the center point on the wall, refer to pellet vent manufacturer installation instructions for correct hole size and clearance to combustibles.
5. Install the wall thimble as per the instructions written on the thimble. Maintain an effective vapour barrier in accordance with local building codes.
6. Install a length of 3" (75 mm) or 4" (100 mm) vent pipe into the wall thimble. The pipe should install easily into the thimble.
7. Connect the exhaust vent pipe to the exhaust pipe on the stove. Seal the connection with high temperature silicone.
8. Push the stove straight back, leaving a minimum of 5.5" (14 cm) clearance from the back of the stove to the wall. Seal the vent pipe to the thimble with high temperature silicone.
9. The pipe must extend at least 12" (30 cm) away from the building. If necessary, bring another length of pipe (PL type) to the outside of the home to connect to the first section. Do not forget to place high temperature silicone around the pipe that passes through the thimble.

** Note :A termination cap is highly recommended however to keep rodents, small animals, etc away as this can be easily accessed with simply having a 45 degree elbow in place.

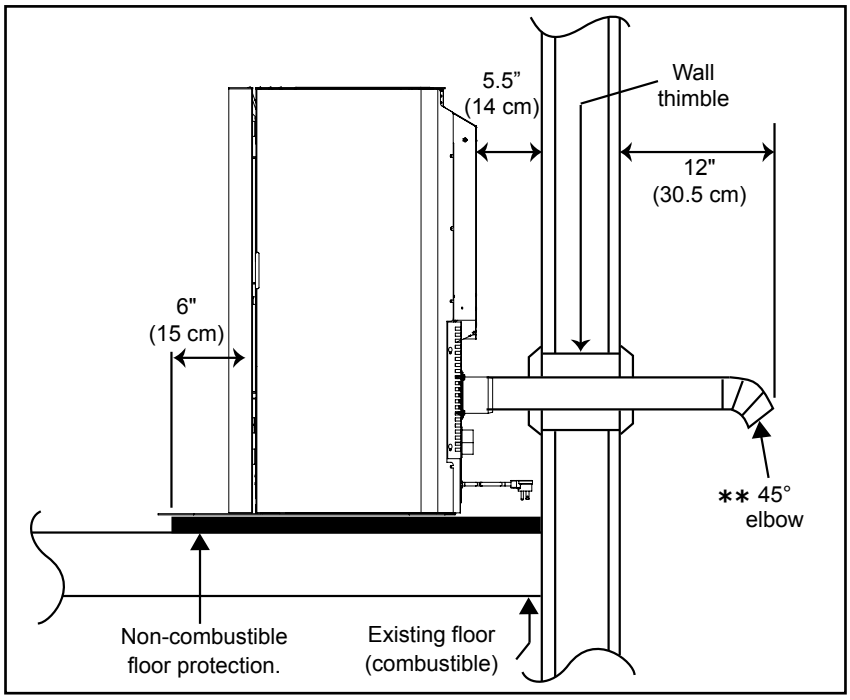

Figure 10: Straight through wall Installation.

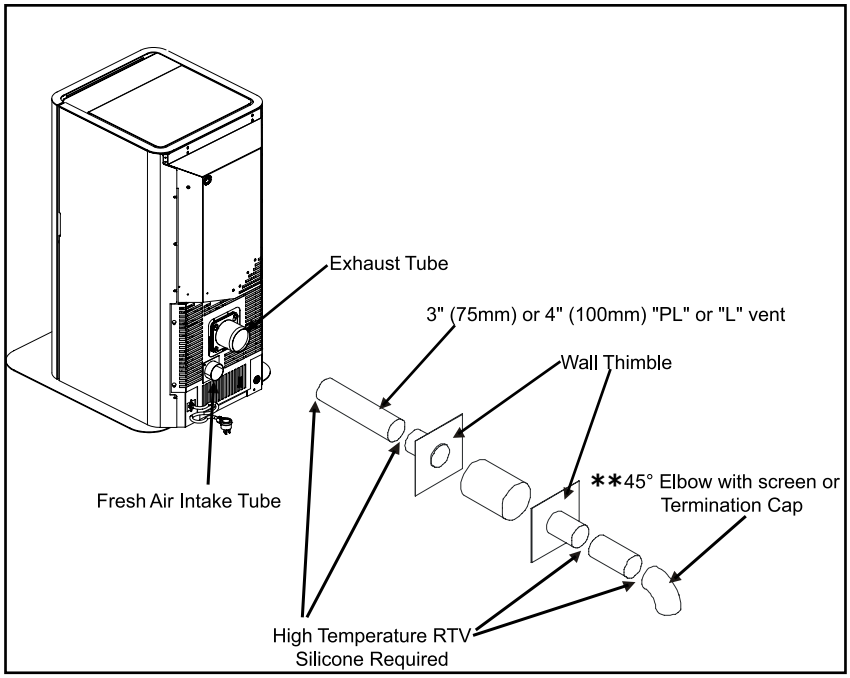

Figure 11: Venting to use with straight through wall Installation.

10. Install a vertical pipe, or if all requirements for direct venting are met, install vent termination. The stainless steel cap termination manufactured by the vent manufacturer is recommended. However, when the vent terminates several feet above ground level and there are no trees, plants, etc. within several feet, a 45° elbow can be used as termination. The elbow must be turned down to prevent rain from entering.

NOTE:

- It is recommended that horizontal through wall installations have 3 to 5 feet (91 to 152 cm) of vertical pipe in the system to help naturally draft the unit in the event of extreme weather or a power outage.
- Some horizontal through wall installations may require a "T" and 3 to 5 feet (91 to 152 cm) of vertical pipe outside the building to help draft the unit. This may be required if a proper burn cannot be maintained, after the stove has been tested and the airflow set. This is due to the back pressure in the exhaust caused by airflow around the structure.
- Follow vent manufacturer guidelines for installation of venting. High temp sealant must be used when connecting vent pipe to the unit's starter pipe. Improper seals at the vent joints may cause combustion by-products to leak into the room where installed - **seal as required.**

Through Wall Vertical Rise Horizontal Termination Installation - Freestanding:

A termination cap is always recommended for this type of install but a stainless steel termination hood or a 45° elbow may be used in place of the cap.

Figure 12 is the recommended installation set up, venting length is negligible.

Figure 13 is the installation to use if there is a concrete or retaining wall in line with exhaust vent on a pellet stove. The termination must be 12" (30 cm) from the outside wall and 12" (30 cm) above the ground.

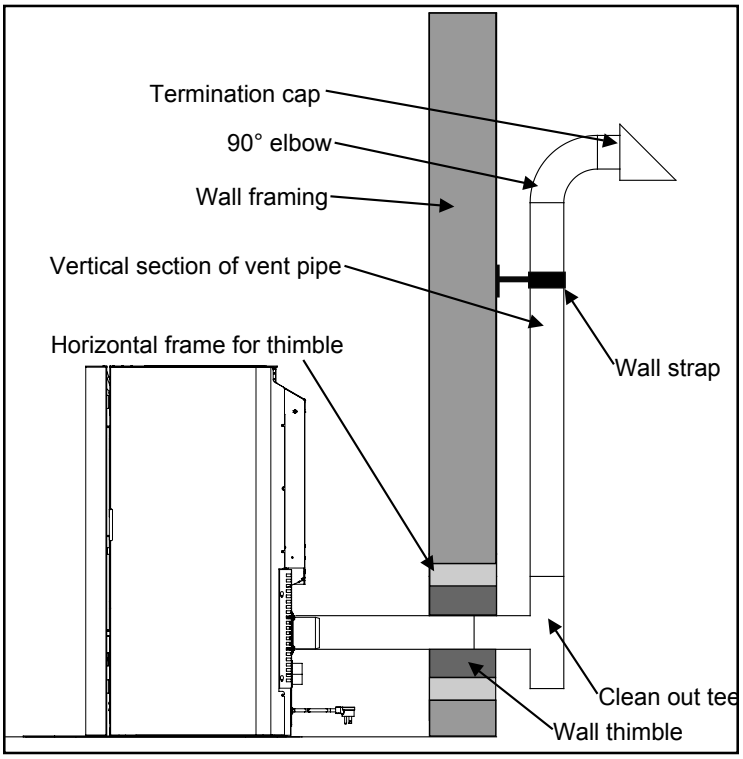

Figure 12: Venting horizontally with rise.

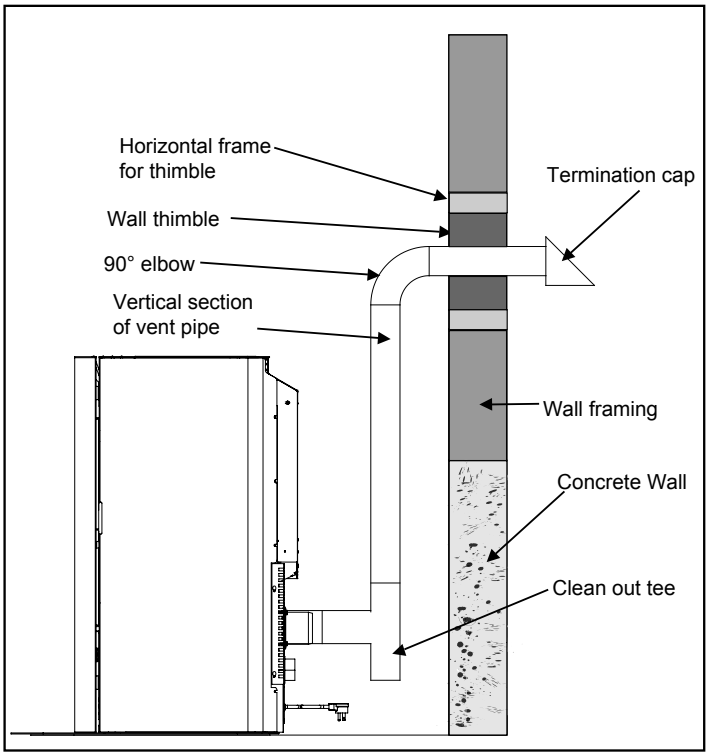

Figure 13: Venting with concrete wall behind unit .

Inside Vertical Installations:

To accomplish a outside vertical pipe installation, follow steps 1 through 5 in the "Inside Vertical Installations - Freestanding" section and then finish it by performing the following (refer to Figure 15).

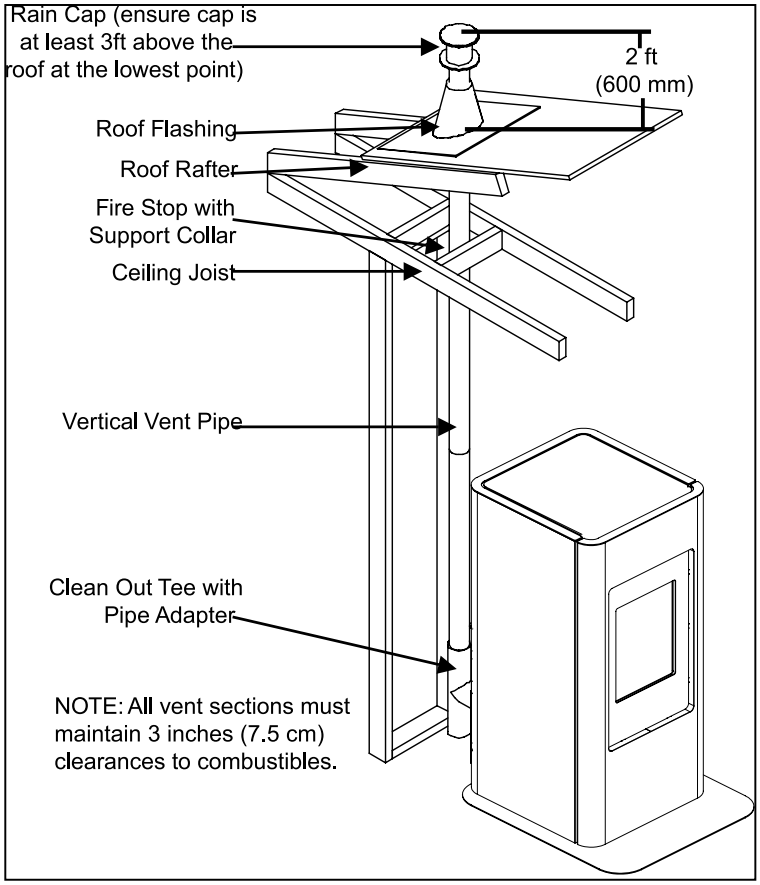

Figure 14: Inside Vertical Installation.

1. Choose a stove location that is ideal. See the section "Deciding Where to Locate your Pellet Appliance."
2. Place a non-combustible hearth pad where necessary.
3. Place the unit on the hearth pad (if installed on a combustible surface) and space the unit in a manner so when the pellet vent is installed vertically, it will be 3" (7.5 cm) away from a combustible wall.
4. Install the tee with clean out.
5. Install the pellet vent upward from there. When you reach the ceiling, make sure that the vent goes through the ceiling fire stop. Maintain a 3" (7.5 cm) distance to combustibles and keep attic insulation away from the vent pipe. Maintain an effective vapor barrier.
6. Finally, extend the pellet vent to go through the roof flashing.
7. Ensure that the rain cap is approximately 24" (600 mm) above the roof.

Outside Vertical Installations:

1. Install a tee with clean out on the outside of the house.
2. Install PL vent upward from the tee. Make sure that you install support brackets to keep the vent straight and secure.
3. Install ceiling thimble and secure the flashing as you go through the roof.
4. Ensure that the rain cap is approximately 24" (600 mm) above the roof.

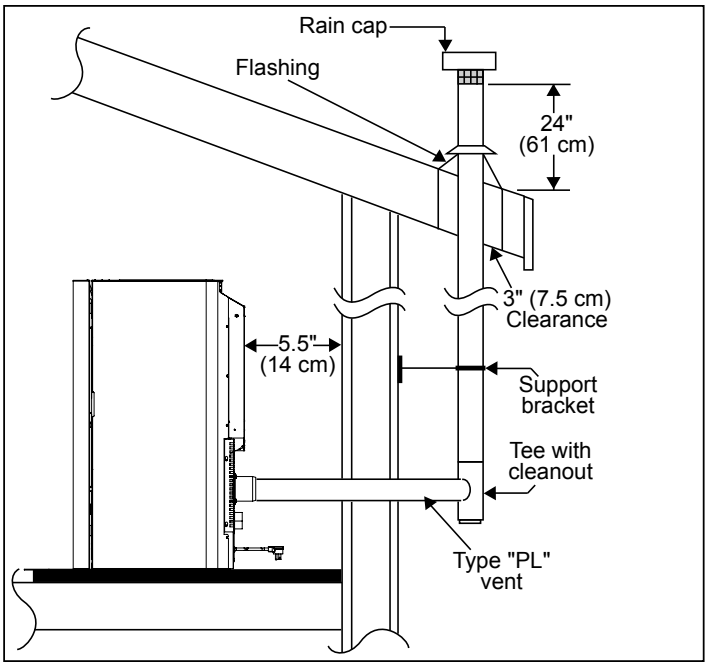

Figure 15: Outside Vertical Installation.

Hearth Mount Installation:

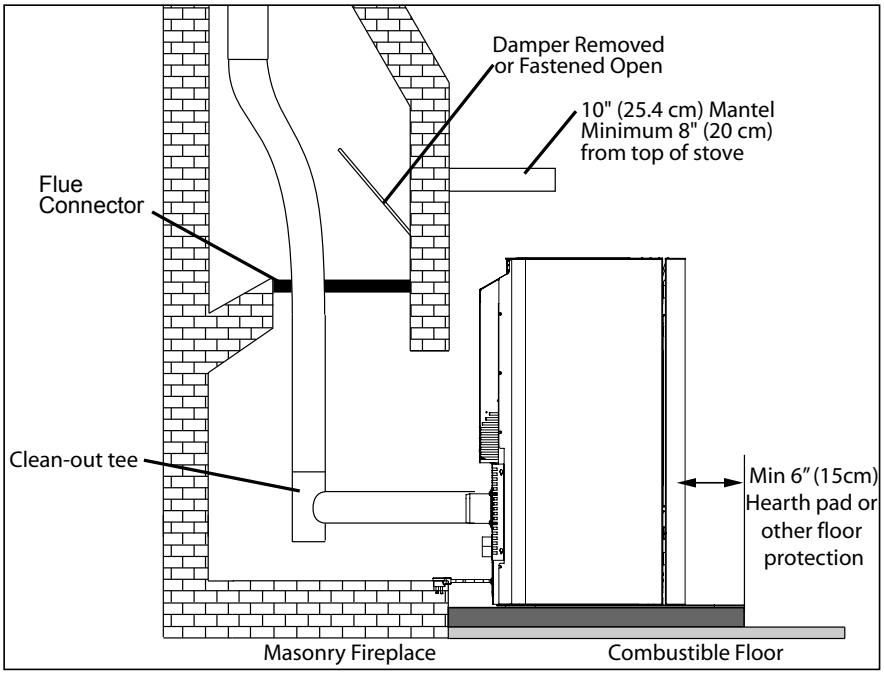

Figure 16: Freestanding hearth mount installation.

Refer to Figures 16 and 17.

1. Install the hearth pad.
2. Lock the fireplace damper in the open position.
3. Install a positive flue connector at the fireplace dampers or seal the chimney at the top.
4. Connect a tee to the exhaust pipe.
5. Install flexible stainless steel liner or listed pellet vent to the top of the chimney.

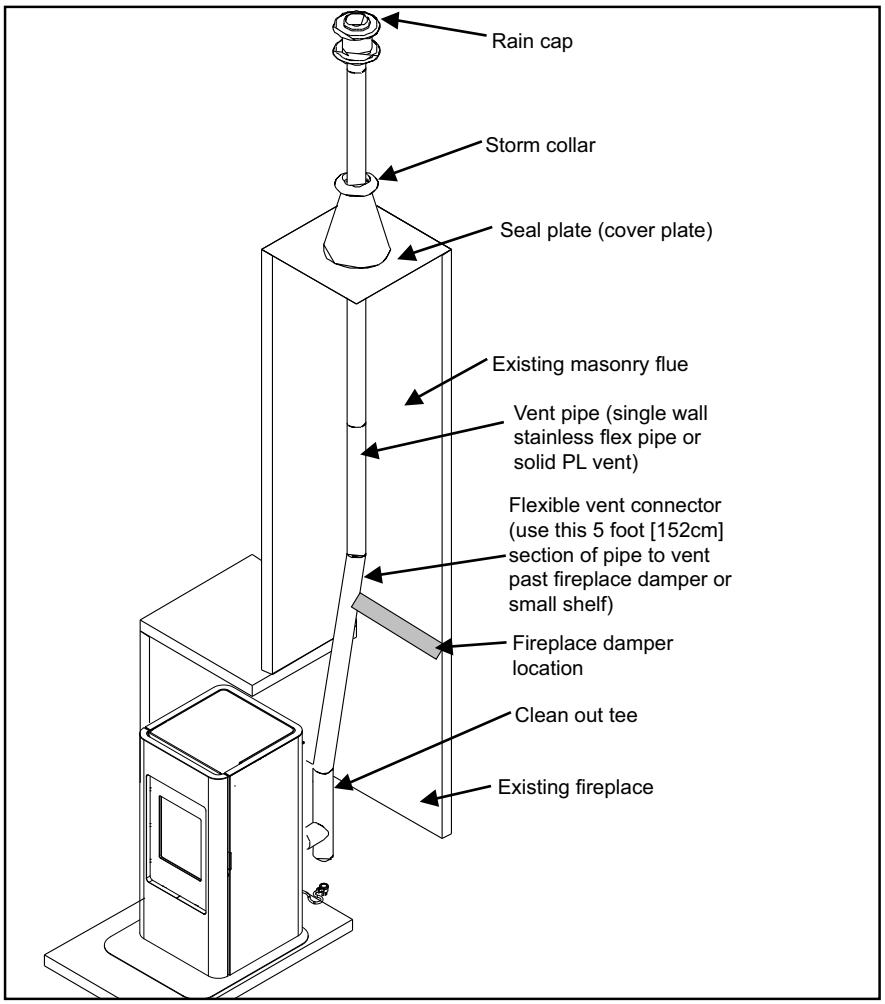

Figure 17: Freestanding hearth mount installation overview.

Thermostat Installation:

1. Remove the outer door and the right side cabinet for easy access to screws securing unit to pallet, there are four T-20 screws at the front and three at the back of each cabinet side.

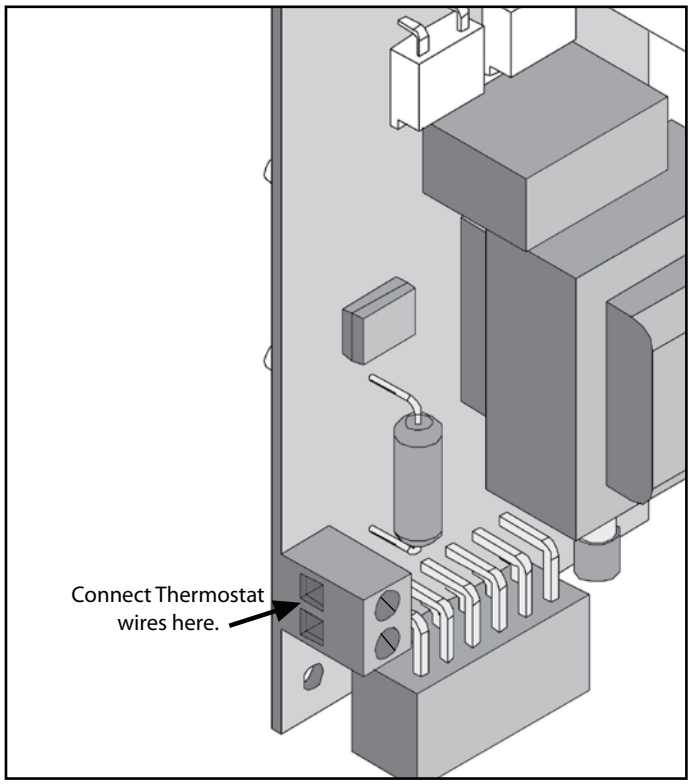

Figure 26: Thermostat wire location

2. Loosen four T-20 screws securing Bottom Back Grill, once loose, slide down and remove.

3. The harness will need to be unplugged from the board in order to move cabinet side away from the unit. Once the harness is unplugged you can easily access the circuit board and will be able to attach the thermostat wires to the thermostat connection shown in Figure 26.

4. Use a small flat head screwdriver to tighten and secure the wires. The wires should be run through the plastic bushing located at the back of the stove, opposite side from the power cord.

5. Reverse steps 3-1

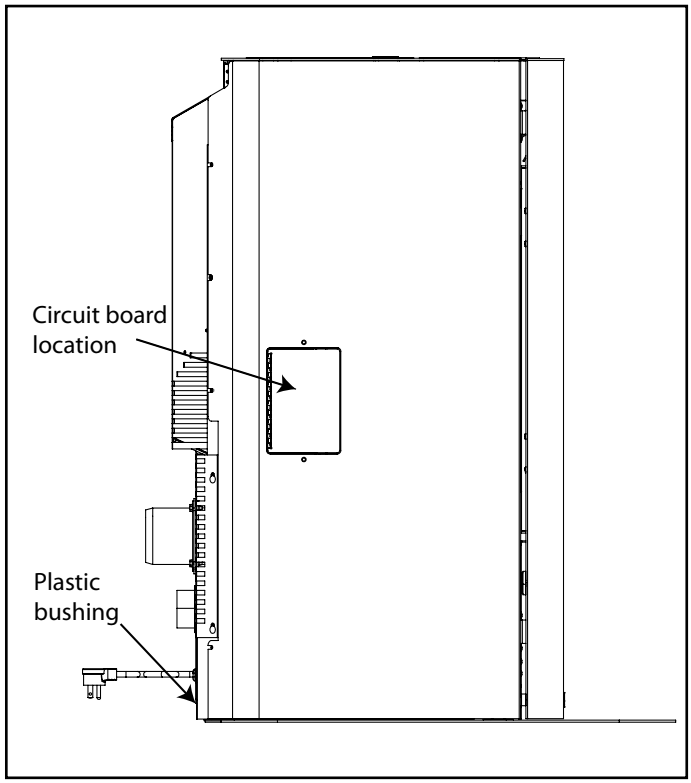

Figure 26a: Circuit board location

Control Board Functions:

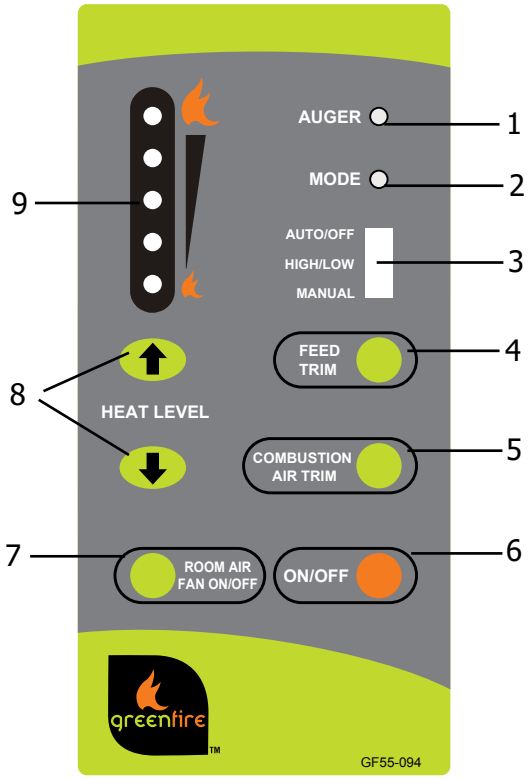

1. AUGER LIGHT:

This green light will flash in conjunction with the auger pulse.

2. MODE LIGHT:

Responsible for signaling the state of the control board. When the light is flashing the stove is in an automatic start mode or the thermostat has control of the unit. When the light is solid, the Heat Level Setting can be altered.

3. THERMOSTAT SWITCH:

Used to set the unit's controls to one of three mode settings; Manual, High/Low, or Auto/Off.

4. FEED RATE TRIM BUTTON:

Used to change the feed rate trims in ¼ second increments for all feed settings. When this button is pressed, all the light will light up on the Heat Output Indicator except for the one that shows the current setting; the default setting is the number 4 light. To adjust the setting hold the Feed Rate Trim button down and press the Heat Level up or down buttons to adjust the setting.

5. COMBUSTION BLOWER TRIM BUTTON: Used to change the Combustion Blower trims in 5 volt increments for all feed settings until it reaches line voltage. When this button is pressed, all the light will light up on the Heat Output Indicator except for the one that shows the current setting; the default setting is the number 2 light. To adjust the setting hold the Combustion Blower Trim button down and press the Heat Level up or down buttons to adjust the setting.

6. ON/OFF BUTTON:

Used to turn the unit On and Off.

7. ROOM AIR FAN ON/OFF BUTTON:

Used to turn convection fan On or Off.

8. HEAT LEVEL ADJUSTMENT BUTTONS:

When pressed, will change the heat level setting of the unit up or down.

9. HEAT OUTPUT INDICATOR:

Shows the present heat output setting.

Automatic Safety Features of Your Pellet Stove:

A. The stove and insert have a low limit safety switch located on the housing of the exhaust blower. If the exhaust temperatures drop below 120°F (49°C) the unit will shut down and will be required to go through a full start up procedure again. You will see a flashing #3 Error code. The most common cause for this is an empty hopper. This switch should only be by-passed for testing purposes by a technician.

B. The stove has a high limit safety switch located just below the hopper behind the external body panels. If the temperature of this switch reaches 200°F (93°C) the auger will stop feeding fuel and the unit will shut down.There will be a flashing #4 error code. The 200°F (93°C) switch is a manual reset and should only be reset by a service person who can first diagnose the reason for failure. The two most likely causes are Convection Fan failure or High Limit Switch failure. Either one needs to be properly diagnosed and rectified. Since this is a safety switch it should never be by-passed for any reason other than the service technician to test the operation.

C. The unit is equipped with a vacuum switch to monitor the venting pressure; if it becomes blocked or the combustion fan fails the vacuum switch will turn off the auger and there will be an **#2** flashing error code.

Operation Your Pellet Stove:

PRE-BURN INSTRUCTIONS: The burn pot liner holes must be clear and the liner installed properly against the ignitor tube for proper operation. Check the hopper for enough pellets to start the unit.

DO NOT OPERATE THE UNIT WITH THE DOOR OR ASH PAN OPEN.

MANUAL MODE:

All control of circuit board function is adjusted at the circuit board. To START: Press the ON / OFF button. The stove will turn on. The system light will flash. The Auger Light will flash with each pulse of the auger (the Auger Feed Rate is pre-programmed during start-up). The Heat Level Indicator will show the Heat Level that the stove will run at after start-up and can be adjusted but the change will not take affect until the start -up has finished. If this is the first time the unit has been started or the unit has run out of fuel, the auger will need to be primed. This can be done by restarting the unit five (5) minutes into its start-up or by putting a small hand full of pellets into the burnpot.

TO OPERATE: When a fire has been established, the System Light will turn solid (after approximately 10 - 15 minutes) and the Auger Light will continue to flash to the corresponding Heat Level setting. The convection blower (room air blower) will turn on. The speed of this blower is controlled by the setting of the heat level output indicator. The convection blower can be turned OFF by depressing the convection blower control button. For the best efficiency the convection blower should be left on at all times.

HIGH/LOW MODE: (Requires a thermostat) INITIAL START-UP: See manual mode above.

OPERATION: When the thermostat calls for heat (contacts are closed) the stove settings are adjustable as per Manual Mode. When the thermostat contacts open, the HEAT LEVEL and Fans will drop down to the LOW setting until the thermostat contacts close again. *The LOW heat setting can be adjusted for different fuel qualities (see "Operating Instructions - Control Board Functions"). The stove will come back to the previous HEAT LEVEL setting when the thermostat contacts close again.

AUTO/OFF MODE: (Requires a thermostat) INITIAL START-UP: See manual mode above.

OPERATION: When the thermostat contacts close, the unit will light automatically. Once up to temperature, the stove operates the same as in MANUAL. When the thermostat contacts open, the stove's HEAT LEVEL and Fans will drop down to the LOW setting for 30 minutes. If the thermostat contacts close within the 30 minutes, the HEAT LEVEL will return to the previous MANUAL setting. If the thermostat contacts remain open the stove automatically begins its shutdown routine. The ON / OFF button can be presses at any time the the stove will immediately shut down. The stove will relight when the thermostat contacts close again.

Turning Your Pellet Stove Off:

MANUAL and HI / LOW mode: To turn the unit OFF, simply press the ON / OFF button. This will stop the feed of pellets. The blowers will continue to operate and cool the stove down. When cool enough, the stove will turn off.

• AUTO / OFF mode: To turn the unit OFF, turn the thermostat down or off. NOTE: The unit will run on low for three (3) minutes before it turns off.

NEVER unplug a unit that is running!
DO NOT unplug unit while Combustion fan is running.
Unplugging may cause smoke to be released into the home.

Damper Set-Up:

DAMPER MUST BE SET AT TIME OF INSTALLATION

This is used to regulate the airflow through the pellet stove, this is key to an efficient clean burn. See figure 29.

If the pellets being burnt are of poor quality there is a higher chance of clinker build up and over time the fire may build up and overflow the burn pot. Poor quality pellets will require more primary air to help complete the burn, the slider damper must be pulled out to compensate. Pulling the slider damper out gives the fire more air. It is crucial to make sure the burn pot is clean and that no holes are blocked for proper combustion. It is recommended to get the stove hot then set the damper at heat level 1, this is the most sensitive setting. There are two ways to set the damper. You can visually set the damper if you have experience.

- A tall, lazy flame with dark orange tips requires more air – Open slider (pull out) slightly.
- A short, brisk flame, like a blowtorch, has too much air – Close slider (push in) slightly.
- If the flame is in the middle of these two characteristics with a bright yellow/orange, active flame with no black tips then the air is set for proper operation, refer to Figure 30.

Preferred Method:

For less experienced installers or owners a magnehelic gauge can be used to determine the proper Damper setting. A magnehelic gauge will accurately measure the pressure in your firebox. There is a small hole on underneath the door on the right side of the firebox front, see figure 31. You want a reading of .10-.13 WC (25-32 Pa) depending on pellet quality.

The combustion exhaust blower is a variable speed blower controlled by heat level setting. This blower will decrease the vacuum pressure inside the stove as the heat level output is decreased.

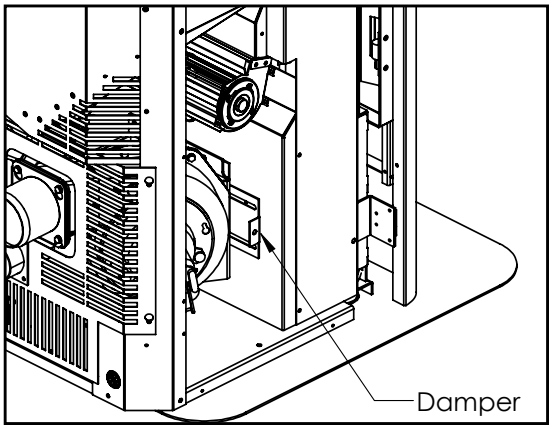

Figure 29: Slider/Damper Adjustment

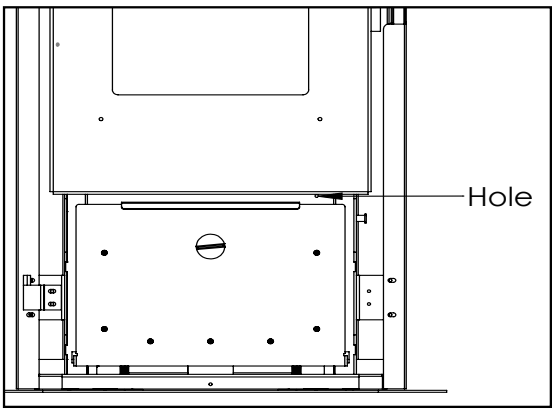

Figure 31: Magnehelic Test Hole.

Figure 30: Efficient Flame.

Guidelines For Fine-Tuning For Fuel Quality:

Due to fuel quality the slider damper and control board trims may need to be fine-tuned.

1. If the unit builds up on all settings, the slider damper rod should be pulled out in small increments to give the unit more air.
2. If the unit has excesses ash build-up in the liner on the lower feed settings, the Combustion Blower Trim should be increased one setting at a time until the problem improves (Factory Setting is #2).
3. If the fire is going out on low because the airflow is too great, the Combustion Blower Trim can be lowered to the #1 setting.
4. If the stove has excesses ash build-up in the liner on the higher settings the Feed Rate Trim should be trimmed down a setting at a time until the problem improves (Factory setting is #4).

5. If you need more heat and the fuel has long pellets, the majority are over 1" (2.5cm) in length, the Feed Rate Trim can be moved up to the #5 setting. NOTE: Only do this if the fuel burns without build-up.

Routine Cleaning and Maintenance

The following list of components should be inspected and maintained routinely to ensure that the appliance is operating at its' optimum and giving you excellent heat value:

2-3 Days / Weekly	Semi-annually or 2 Tons of Fuel
Burn Pot and Liner	Exhaust Vent
Heat Exchanger Tubes	Air Intake
Ash Pan	Blower Mechanisms
Door Glass	Heat Exchanger Tubes
Inside Firebox	Behind Firebox Liners & Covers
Ash Pan and Door Gaskets	All Hinges
Door Latch	Post Season Clean-up

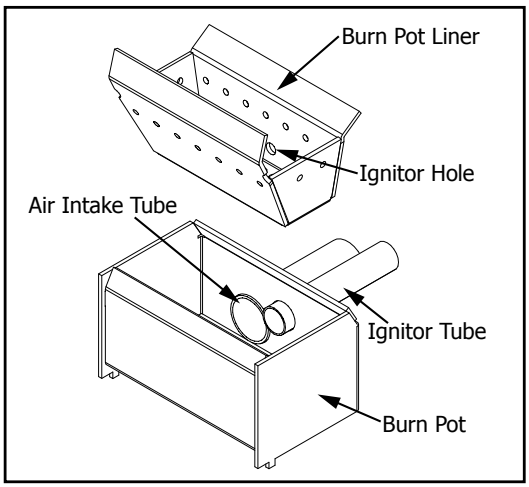

Figure 32: GF40 Burn pot and Liner

TOOLS REQUIRED TO CLEAN UNIT:

Torx T-20 Screwdriver, 5/16" wrench or socket, Brush, Soft Cloth, Vacuum with fine filter bag

BURNER POT AND LINER (2-3 days)

Every two to three days (when the unit is cold), remove the burn-pot liner from the stove. Using a metal scraper, remove material that has accumulated or is clogging the liner's holes. Then dispose of the scraped ashes from the liner and from inside the burn-pot. Place the burn-pot back into the stove, making sure that the pipes are properly inserted into the burn pot. Place the liner back into the burn-pot, making sure that the ignitor hole in the liner is aligned with the ignitor tube (shown in Figure 32). Push the liner up against the ignitor tube.

If after long periods of burning, the fire continually builds up and overflows the burn pot or there is a build up of clinkers, this is an indication that the pellet fuel quality is poor, the stove may need cleaning, or the air adjusted. Check the stove for ash build up (clean if required) and adjust the damper to produce the proper clean combustion.

HEAT EXCHANGER TUBES (2-3 days)

A rod is located in the center of the stove just above the door behind the top louvers, see Figure 35. This rod is to be pulled up and down a few times (ONLY WHEN THE UNIT IS COLD) in order to clean away any fly ash that may have collected on the heat exchanger tubes. As different types of pellets produce different amounts of ash, cleaning of the tubes should be done on a regular basis to enable the unit to run efficiently. Do pull on rod excessively if it is not sliding. If stuck inspect rod for bend and try and free up scraper plate from inside firebox.

ASH PAN AND DOOR GASKETS (weekly)

After extended use the gasket may come loose. To repair this, glue the gasket on using high-temperature fiberglass gasket glue available from your local dealer. This is important to maintain an airtight assembly.

Routine Cleaning and Maintenance

DOOR GLASS CLEANING (2-3 days)

Cleaning of the glass must only be done when stove is cold. Open the door. The glass can be cleaned by wiping down the outside and inside of the glass with a soft dry cloth.

If the glass has build up that can not be removed with only the cloth, clean the glass using paper towel and a gas appliance glass cleaner, this may be purchased through most dealers. If a gas appliance glass cleaner is not available, use a damp paper towel dipped in fly ash to clean the glass. After the glass has been cleaned use the dry soft cloth to wiping down the outside and inside of the glass.

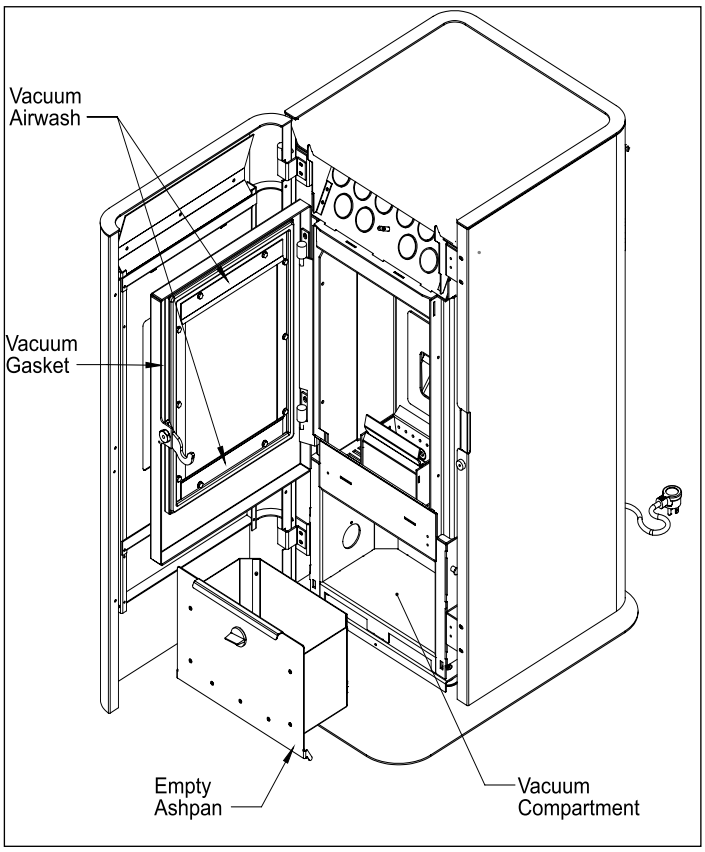

Figure 33: GF40 Open

ASH PAN (weekly)

This part is located behind the bottom door. To remove the ash pan, open the cover from the right hand side, and lift the ash pan up and out. Dump the ashes into a metal container stored away from combustibles. Monitor the ash level every week. Remember that different pellet fuels will have different ash contents. Ash content is a good indication of fuel efficiency and quality. Refer to "Safety Warnings And Recommendations" for disposal of ashes. Vacuum the inside of the ash pan compartment inside the pedestal including the hole at the top back of the compartment. Replace the ash pan ,close the latch, and close pedestal door. **DO NOT PLACE UNBURNED OR RAW PELLET FUEL IN ASH PAN.**

AIR INTAKE (semi-annually)

Inspect periodically to be sure that it is not clogged with any foreign materials.

EXHAUST PASSAGES (Semi-annually)
To prevent build up of fly-ash all the exhaust passages must be cleaned and vacuumed.

<u>Clean behind clean-out covers:</u>

- Open ash box cover.
- Remove ash box.
- Using a 5/16" socket, loosen the six screws in the ash box compartment; four on the back.
- Rotate the back cover counter clockwise

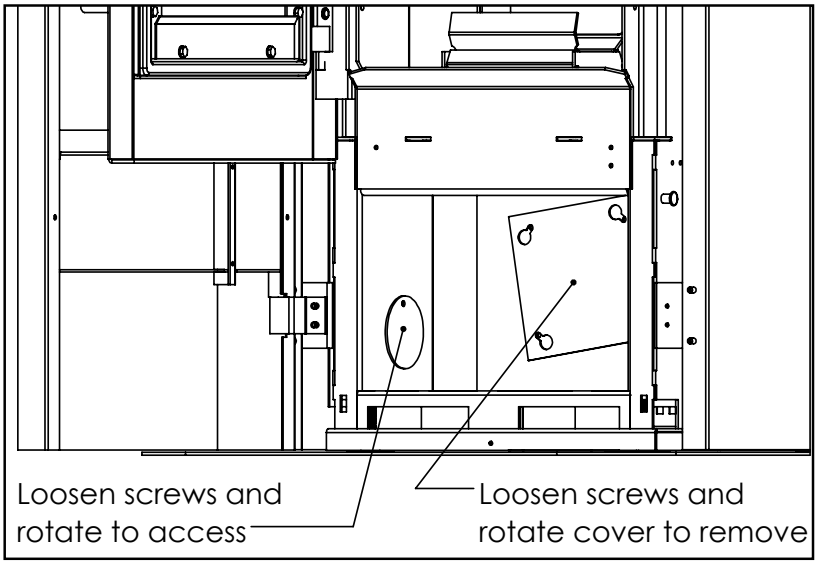

Figure 34: GF40 Clean-Out Covers.

Routine Cleaning and Maintenance

- To remove and rotate the side covers to open them.
- Vacuum out all three 3 chambers.
- Close all the clean-out covers and

HEAT EXCHANGER TUBES (2-3 days)

- The heat exchanger tubes are located behind the Louver assembly. To access Heat Exchanger Scraper Rod, remove middle two louvers by tipping up and pulling out.
- Pull out the Scraper Rod shown in Figure 35 in order to remove any fly ash that may have collected on the heat exchanger tubes. This will allow for optimal heat transfer to convection air.

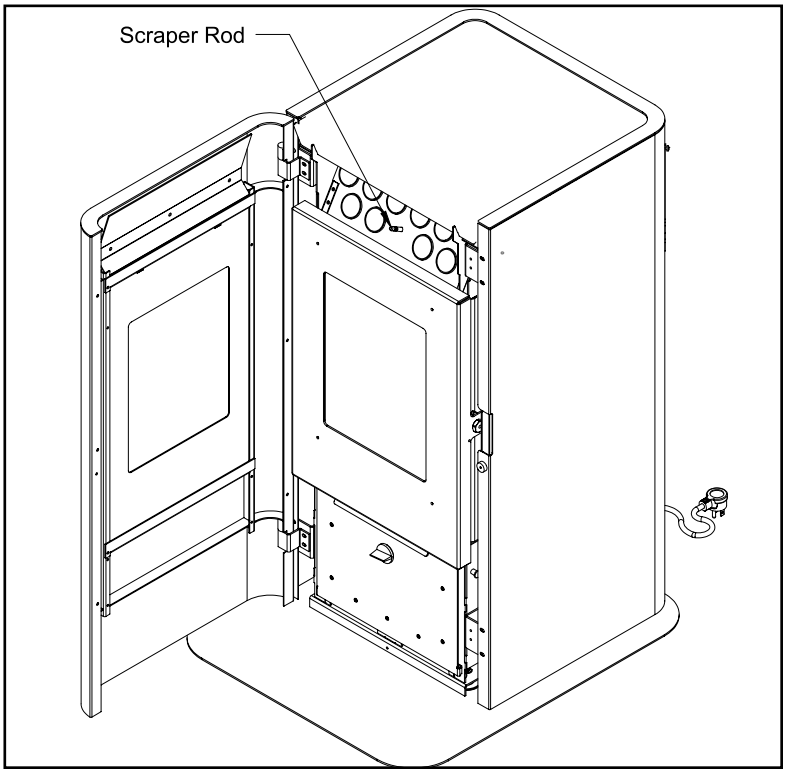

Figure 35: GF40 Heat Exchanger Tubes

REMOVAL OF FIREBOX PANELS

- Open the door, remove the door, burn pot and burn pot liner.
- Lubricate all screws with penetrating oil.
- Remove the four screws that hold the side panels in place.
- With the tip of a flat screwdriver, gently lift up the side panels and remove the side panels.
- Pull the center panel out.
- Vacuum thoroughly.
- Re-install panel by inserting center panel.
- Place the side panels back into the firebox locking them into place and re-install the two screws on each side.
- Clean thoroughly.

Note: Screws that secure left side panel also secure hinge bracket which holds the door. Remove door before unscrewing.

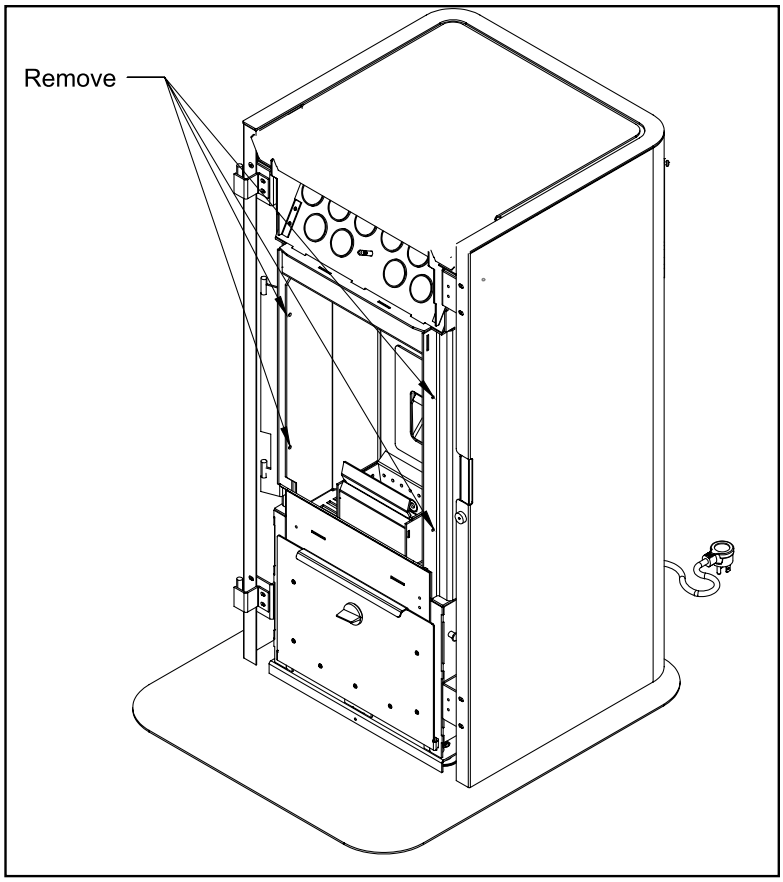

Figure 36: GF40 Firebox Panels

Routine Cleaning and Maintenance

FIREBOX (weekly)

The paint on the steel firebox panels may peel. This is due to extreme conditions applied to the paint and is in no way covered by warranty. Brush and vacuum up all soot and flyash from firebox.

AIR WASH (semi-annually)

Vacuum out the air wash passages at the top of the glass (see Figure 33). We recommend that a soft brush nozzle head is used on the vacuum.

EXHAUST VENT (semi-annually)

This vent should cleaned every year or after two tons of pellets. We recommend contacting your dealer for professional cleaning. To clean the vent pipe, tap lightly on the pipe to dislodge any loose ash. Open the bottom of the "T" to dump the ash, then vacuum as much of the ash out of the vent pipe as possible. Failure to clean exhaust venting can result in a serious creosote fire.

BLOWER MECHANISMS (semi-annually)

Unplug the stove then open the right and left side panels to access the two blowers. Vacuum all dust from motors. DO NOT lubricate the motors. Check gaskets and replace if needed.

HINGES

Check to make sure all hinges are working properly. You may use high temp anti-sieze on door hinges for smoother operation.

POST SEASON CLEAN-UP

Once you are finished using the pellet appliance for the season, unplug the stove for added electrical protection. It is very important that the stove be thoroughly cleaned and serviced. Pellet stove should be regularly service for optimum efficiency and prolonged life.

DOOR GLASS REPLACEMENT

Never run a stove with broken glass, new glass must be purchased and installed by a Regency dealer. The door glass is made of high temperature "PYROCERAM" ceramic glass. The proper glass size is 13" x 9.5" x 0.2" (5mm). To replace the glass, unscrew and remove the seven retainer screws. Carefully remove the glass and any broken pieces using protective gloves. High temperature fiberglass tape should be used around the glass on the sides and bottom. Place glass with fiberglass tape around outside into cast door, there should be no gasket at the top. Use the same retainers to secure the glass in place, make sure glass is properly seated in the cast door before tightening screws. Do not strike or slam door shut this can cause glass to break. The use of substitute glass materials is prohibited use only part 50-2942.

Troubleshooting

DO NOT:

● Service the stove with wet hands. The stove is an electrical appliance, which may pose a shock hazard if handled improperly. Only qualified technicians should deal with possible internal electrical failures.

● Do not remove from the firebox any screws without penetrating oil lubrication.

WHAT TO DO IF:

1. The stove will not start.
2. The stove will not operate when hot.
3. The exhaust blower will not function normally.
4. Light # 2 on Heat output bar flashing.
5. Auger light flashes but auger motor does not turn at all
6. Light # 4 on Heat output bar flashing.
7. The convection blower will not function normally.
8. Igniter- the pellets will not light.
9. Control settings (Heat Level) has no effect on the fire.
10. The stove keeps going out.

***NOTE: All troubleshooting procedures should be carried out by qualified technicians or installers.**

1. The stove will not start.

Make sure the stove is plugged in and the wall outlet is supplying power..

If the Control Board has been placed in the ON /OFF thermostat mode, then turn the thermostat up to call for heat.

Check the Heat Level Indicator. - If the # 2 light is flashing (see the # 2 light is flashing)

Check the fuse on the circuit board.

If the unit still does not start, contact your local service dealer for service.

2. The stove will not operate when hot.

Check the Heat Level Indicator if a fire is not detected, or if the fire has gone out the #3 light will flash because the Exhaust Temperature Sensor's contacts have opened.

Check the hopper for fuel.

Incorrect air damper setting. - Excessive air may consume the fire too quickly before the next drop of fuel, leaving completely unburned fuel in the burn pot liner. - Insufficient air will cause build up, further restricting the air flow through the Burn Pot Liner. This in turn will cause the fuel to burn cold and very slowly. Fuel may build up and smother the fire. In this case clean the burn pot. (NOTE: unit may require a change to the vent system or installation of fresh air to correct Air to Fuel ratio problems).

Combustion Blower failure. - The Combustion Blower is not turning fast enough to generate the proper vacuum in the fire box. Visual Check – is the blower motor turning.

Check the Exhaust Blower voltage across the blower wires (>=114V on #5 setting and >= 82V on #1 setting). – Replace the Circuit Board if the Voltage reading is less than 82 V. with a line voltage >114 V AC.

Check Vacuum levels in the exhaust channel by bypassing the Vacuum Switch, then remove the Vacuum hose from Vacuum Switch. Check exhaust vacuum readings by placing the open end of the Vacuum Hose on a Magnahelic Gauge (readings must be above .10" W.C. on low fire).
If the motor fails to reach a 0.10" W.C. readings, then replace the Combustion Blower.

3. The exhaust motor will not function normally.

☐Open the left side access panel; check all connections against the wiring diagram.

☐See "2. The stove will not operate when hot." section.

Troubleshooting

4. Light # 2 on Heat output bar flashing.
(The Vacuum Switch contacts have opened for more than 15 sec.)
☐Pinch, break or clear blockage in Vacuum Hose - Check hose for pinch points or damage, replace or re-route as required. Blow out Vacuum Hose
☐Blocked Hose Barb on Exhaust Channel - Use a paper clip to clean out Hose Barb or remove the Vacuum Hose from the Vacuum Switch and blow into the hose to remove blockage.
☐Blocked exhaust / venting system - Have stove and venting cleaned and inspected.
☐Severe negative pressure in area where unit is installed - Check the operation by opening a window, does this solve the problem? If it does, install fresh air intake to unit or room. Venting system may require vertical section to move termination into a low pressure zone.
☐Vacuum Switch failure - Bypass the vacuum switch, if this corrects the problem check for above problems before replacing the Vacuum Switch.
☐Damage to gray wires between Circuit Board and Vacuum Switch - Inspect wires and connectors
☐Combustion Blower failure - The Combustion Blower is not turning fast enough to generate the proper vacuum in the Exhaust Channel. Visual Check; is the blower motor turning? Check the Exhaust Blower voltage across the blower wires (>=114V on #5 setting and >= 82V on #1 setting). – Replace the Circuit Board if the Voltage reading is less than 82 V. with a line voltage >114 V AC.
☐Check Vacuum levels in the exhaust channel by bypassing the vacuum switch, then remove the Vacuum hose from Vacuum Switch. Check exhaust vacuum readings by placing the open end of the Vacuum Hose on a Magnahelic Gauge. (readings must be above .10" W.C. on low fire).
If the motor fails to reach a 0.10" W.C. readings, then replace the Combustion Blower
To reset Circuit Board after a trouble code - push the ON/OFF button
5. Auger light flashes but auger motor does not turn at all.
☐If the Auger gear box does not turn but the motor's armature does try to spin then the auger is jammed. – Try to break apart jam by poking at the jam through the drop tube. If this fails then empty the hopper and remove the Auger Cover **Remember to re-seal the cover after installation**
☐Check the fuse on the circuit board.
6. Light # 4 on Heat output bar flashing.
☐Reset high limit sensor and determine cause – was it Convection Blower failure?

NOTE: DO NOT attempt any electrical troubleshooting without knowledge of electrical systems, make sure unit is not plugged in. It is recommended to call an authorized Regency dealer or service technician.

7. Ignitor- the pellets will not light.
☐Everything else in the stove operates but the ignitor will not light the pellets.
☐Make sure the burn pot liner is up tight and square to the ignitor tube by pushing the burn pot back against the ignitor tube.
☐Check to see if the exhaust blower is operating. If not, contact your local dealer for service.
☐Check the fuse on the circuit board.
NOTE: The ignitor should be bright orange in color. If not replace the ignitor.
8. Control settings (Heat Level) has no effect on the fire.
☐NOTE: If the system light is flashing the Control Board has complete control of the unit. When the units system light becomes solid then control of the unit is given back to the operator.
☐If there is no control of the Heat Level button make sure the thermostat is calling for heat.

Troubleshooting

☐Call your local dealer for service.
9. The stove keeps going out.
If the stove goes out and leaves fresh unburned pellets or cigarette-like ashes in the burn pot liner, the fire is going out before the stove shuts off.
☐Check to see that the Slider / Damper is in the correct position (set with a magnehelic gauge).
☐Turn the Heat Level up slightly (poor quality pellets will require slightly higher settings).

If the stove goes out and there are partially burned pellets left in the burn pot liner, the stove has shut down due to a lack of air, exhaust temperature, or power failure:
☐Adjust the Slider / Damper.
☐Adjust the trim settings
☐Check to see if the stove needs a more complete cleaning.
☐Turn the Heat Level up slightly (poor quality pellets will require slightly higher settings).
☐Did the power go out?
☐Contact your local Dealer for service.

Wiring Diagram

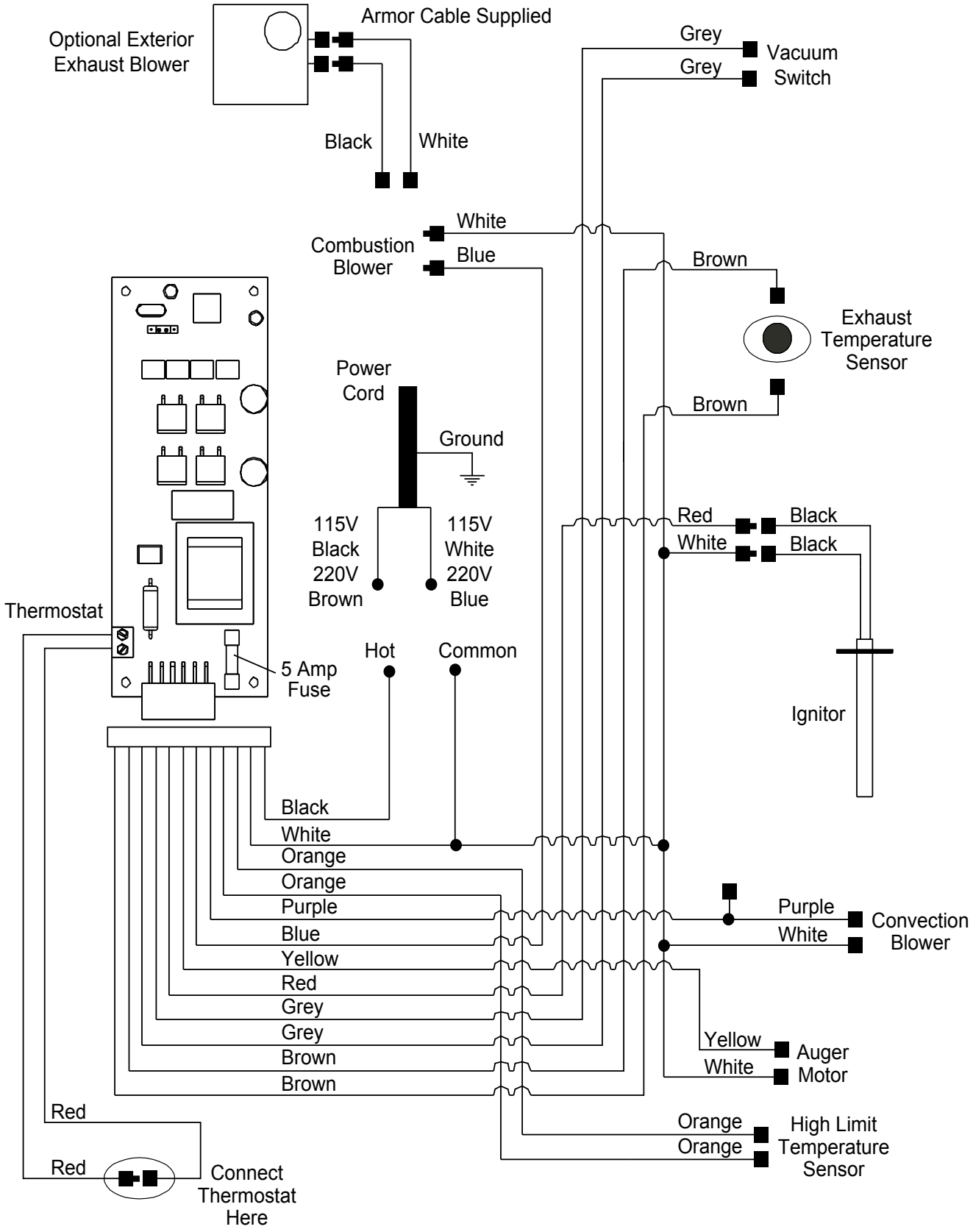

Ref. #	Part #	Description
1	GF55-009	120°F EXHAUST TEMP SENSOR
2	GF55-001	AUGER MOTOR 115 VOLT
3	GF55-011	200 DEGREE F. HIGH LIMIT SENSOR MANUAL RESET
4	GF55-012	VACUUM SWITCH
5	GF55-013	SILICONE HOSE
6	GF40-006	SS ASH PAN LATCH
7	GF40-007	DOMESTIC POWER CORD
8	GF40-008	400 WATT IGNITOR
9	GF40-009	EXHAUST/COMBUSTION BLOWER ASSEMBLY 115 VOLT
10	GF40-010	CONVECTION BLOWER 115 VOLT
11	GF40-011	LEVELING LEGS (SET OF 4)
12	GF40-012	DOOR GASKET ROPE
13	GF40-013	GLASS WITH GASKET
14	GF55-093	CIRCUIT BOARD
15	GF55-094	CONTROL PANEL DECAL
16	GF40-016	AUGER
17	GF40-017	HEAT EXCHANGER SCRAPER ROD
18	GF40-018	DRAFT SLIDER
19	GF40-019	DOOR HINGE BRACKET
20	GF40-020	BURN POT
21	GF40-021	BURN POT LINER
22	GF40-022	ASH PAN
23	GF40-023	INNER DOOR
24	GF40-024	OUTER DOOR
25	GF40-025	HEARTH PAD
26	GF40-026	CABINET SIDES (L & R)
27	GF40-027	BOTTOM CABINET SIDE BRACKETS
28	GF40-029	TOP CABINET SIDE BRACKETS
29	GF40-030	OUTER DOOR HINGE PINS
30	GF40-031	AUGER STOP PLATE
32	GF40-033	HOPPER LID
33	GF40-034	TOP TRIM
34	GF40-049	DOOR TOOL
35	GF40-039	STEEL DOOR LATCH
36	GF40-037	FIREBOX LINERS
37	GF55-033	EXHAUST STARTER TUBE C/W GASKET
37A	GF55-017	EXHAUST STARTER TUBE GASKET ONLY

Ref. #	Part #	Description
38	GF40-040	MACHINED DOOR NUT LATCH
40	GF40-041	ALUMINUM HOSE BARB (VACUUM LINE)
41	GF55-045	AUGER BRASS BUSHINGS (SET OF 2)
43	GF55-006	CIRCUIT BOARD FUSE (2 PCS)
44	GF55-047	5/8” ID AUGER COLLAR WITH SCREW
45	GF40-045	WIRE HARNESS
46	GC60-004	AUGER STOPS (CLEAR TUBE)
47	GF55-023	BURNPOT SCRAPER TOOL
48	GF55-048	CLEANING BRUSH
50	919-557	GF40 USERS MANUAL
51	GF40-012	DOOR GASKET ROPE
52	936-299	ASH PAN GASKET (SOLD PER FOOT/4 FEET REQUIRED)
53	GF55-015	COMBUSTION BLOWER MOUNTING GASKET
54	GF55-016	COMBUSTION BLOWER GASKET
N/S	GF40-053	MINI BACKDRAFT FLAP WITH OVAL GASKET

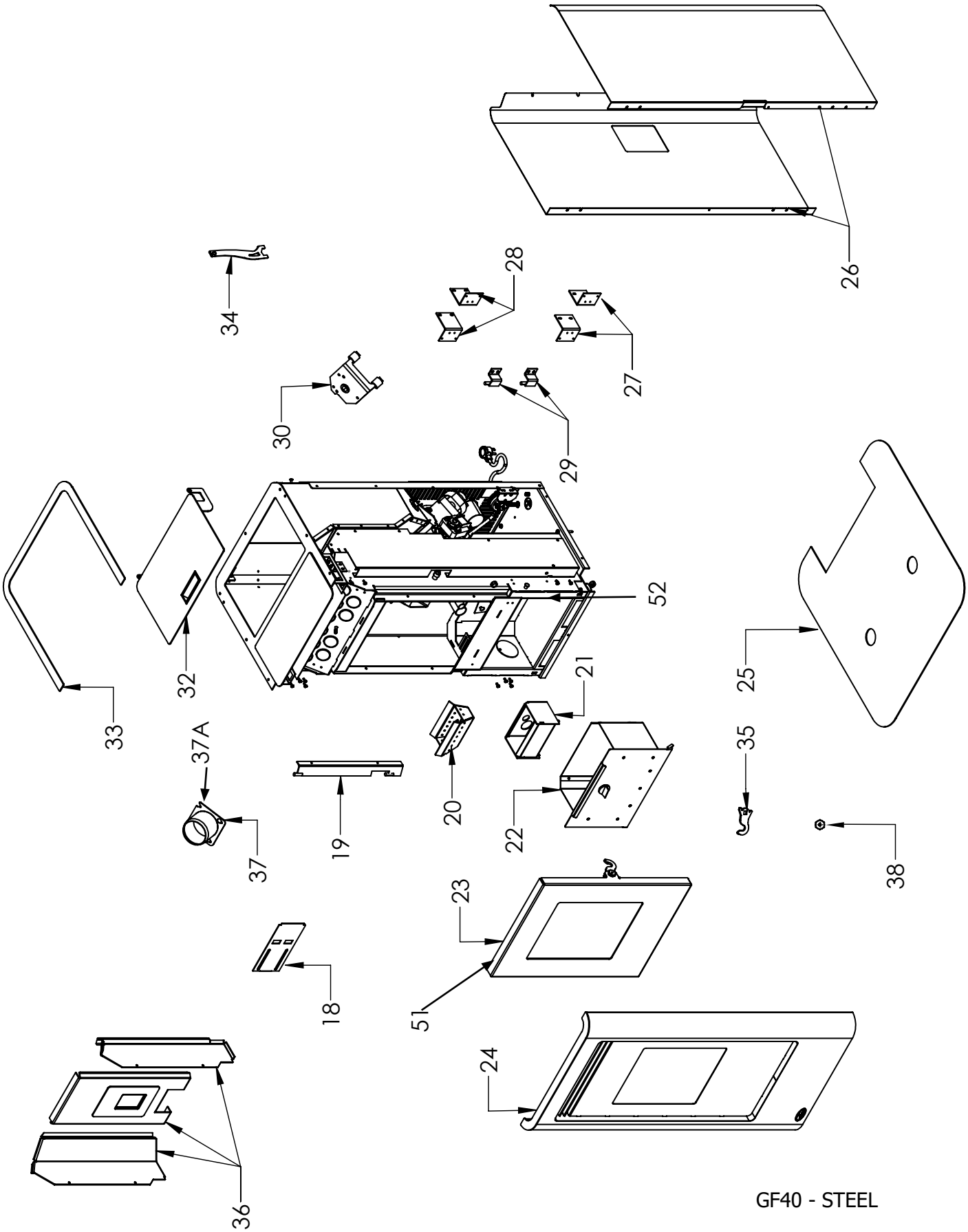

GF40 - STEEL

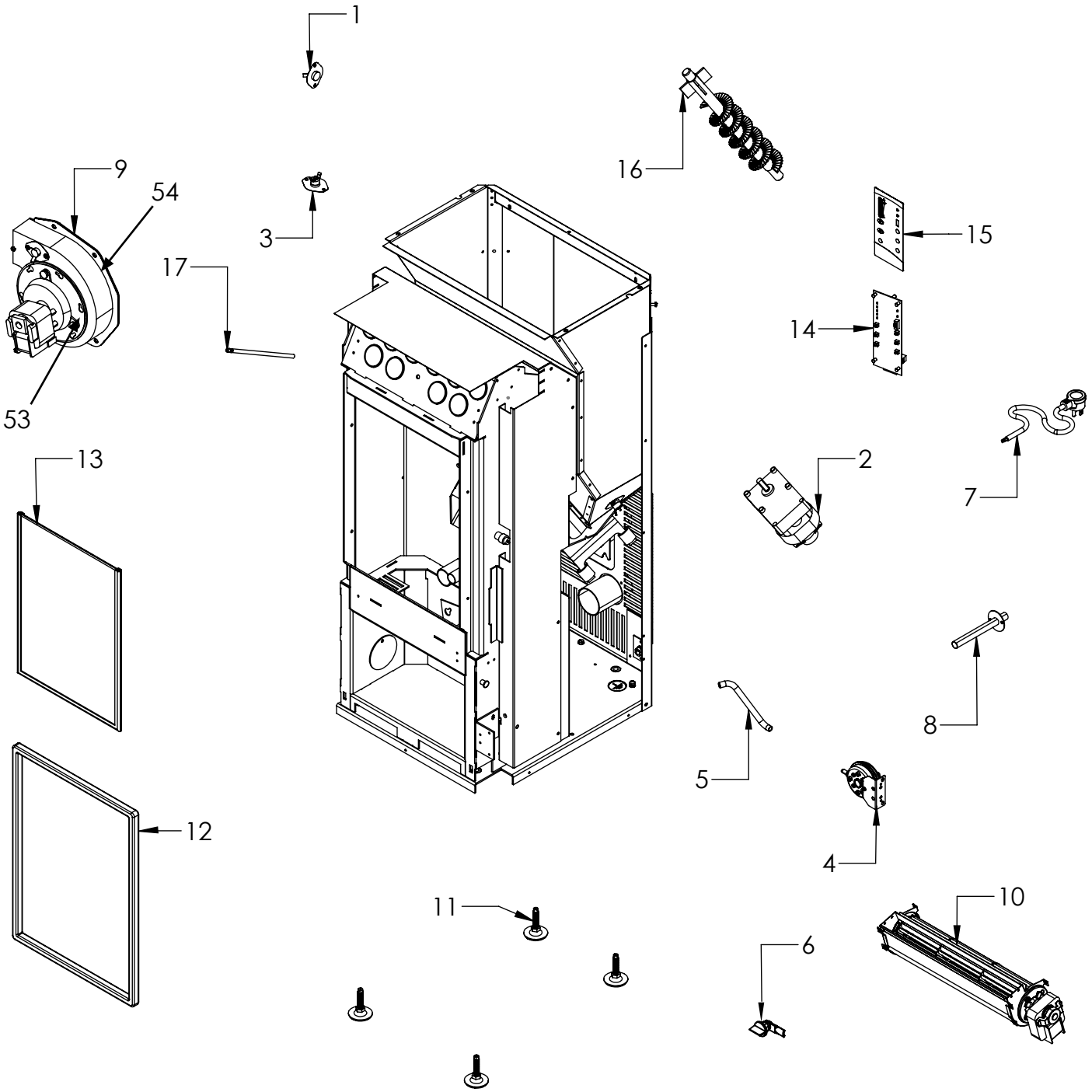

GF40 - COMPONENTS

Limited Lifetime Warranty

FPI Fireplace Products International Ltd. (for Canadian customers) and Fireplace Products U.S., Inc. (for U.S. customers) (collectively referred to herein as "FPI") extends this Limited Lifetime Warranty to the original purchaser of this appliance provided the product remains in the original place of installation. The items covered by this limited warranty and the period of such coverage is set forth in the table below.

Some conditions apply (see below).

The policy is not transferable, amendable or negotiable under any circumstances.

Pellet Products Warranty Coverage for Components and labor is as follows:	Component Coverage 7 years	2 years	Labour Coverage (Years)
Firebox/Heat exchanger	✓		2
Surrounds, castings, door assembly.	✓		2
Burn Pot, Log sets, Firebox panels,	✓		2
Ceramic Glass (Thermal Breakage)	✓		2
Pedestals, legs	✓		2
Burn Pot Liner		✓	2
Agitator		✓	2
Auger Motor, Combustion blower, Convection blower		✓	2
Wiring, all switches, Wiring harness, Power cords		✓	2
Circuit boards, Circuit board ribbon cable		✓	2
Vacuum switch, Ignitor, Air pump, Temperature sensors, Wall thermostat		✓	2
Auger		✓	2
Circuit Board Decals		✓	
Hopper Rails/ Baffle		✓	2

Conditions:

Warranty protects against defect in manufacture or FPI factory assembled components only, unless herein specified otherwise.

Any part(s) found to be defective during the warranty period as outlined above will be repaired or replaced at FPI's option through an accredited distributor, dealer or pre-approved and assigned agent provided that the defective part is returned to the distributor, dealer or agent for inspection if requested by FPI. Alternatively, FPI may at its own discretion fully discharge all of its obligations under the warranty by refunding the verified purchase price of the product to the original purchaser. The purchase price must be confirmed by the original Bill of Sale.

The authorized selling dealer, or an alternative authorized FPI dealer if pre-approved by FPI, is responsible for all in-field diagnosis and service work related to all warranty claims. FPI is not responsible for results or costs of workmanship of unauthorized FPI dealers or agents in the negligence of their service work.

At all times FPI reserves the right to inspect reported complaints on location in the field claimed to be defective prior to processing or authorizing of any claim. Failure to allow this upon request will void the warranty.

All warranty claims must be submitted by the dealer servicing the claim, including a copy of the Bill of Sale (proof of purchase by you). All claims must be complete and provide full details as requested by FPI to receive consideration for evaluation. Incomplete claims may be rejected.

Replacement units are limited to one per warranty term. Airtube and baffle replacements are limited to one replacement per term.

Unit must be installed according to all manufacturers' instructions as per the manual.

All Local and National required codes must be met.

The installer is responsible to ensure the unit is operating as designed at the time of installation.

The original purchaser is responsible for annual maintenance of the unit, as outlined in the owner's manual. As outlined below, the warranty may be voided due to problems caused by lack of maintenance.

Repair/replacement parts purchased by the consumer from FPI after the original coverage has expired on the unit will carry a 90 day warranty, valid with a receipt only. Any item shown to be defective will be repaired or replaced at our discretion. No labor coverage is included with these parts

Exclusions:
This Limited Lifetime Warranty does not extend to paint, rust or corrosion of any kind due to a lack of maintenance or improper venting, combustion air provision, corrosive chemicals (i.e. chlorine, salt, air, etc.), inner panels, door or glass gasketing, or any other additional factory fitted gasketing.

Malfunction, damage or performance based issues as a result of environmental conditions, location, chemical damages, downdrafts, installation error, installation by an unqualified installer, incorrect chimney components (including but not limited to cap size or type), operator error, abuse, misuse, use of improper fuels (plastics, garbage, solvents, cardboard, coal or coal products, oil based products, waxed cartons, compressed pre-manufactured logs), lack of regular maintenance and upkeep, acts of God, weather related problems from hurricanes, tornados, earthquakes, floods, lightning strikes/bolts or acts of terrorism or war, which result in malfunction of the appliance are not covered under the terms of this Limited Lifetime Warranty.

FPI has no obligation to enhance or modify any unit once manufactured (i.e. as products evolve, field modifications or upgrades will not be performed on existing appliances).

This warranty does not cover dealer travel costs for diagnostic or service work. All labor rates paid to authorized dealers are subsidized, pre-determined rates. Dealers may charge homeowner for travel and additional time beyond their subsidy.

Any unit showing signs of neglect or misuse will not be covered under the terms of this warranty policy and may void this warranty. This includes units with rusted or corroded fireboxes which have not been reported as rusted or corroded within three (3) months of installation/purchase.

Units which show evidence of being operated while damaged, or with problems known to the purchaser and causing further damages will void this warranty.

Units where the serial no. has been altered, deleted, removed or made illegible will void this warranty.

Minor movement, expansion and contraction of the steel is normal and is not covered under the terms of this warranty.

Freight damages for products or parts are not covered under the terms of the warranty.

Products made or provided by other manufacturers and used in conjunction with the FPI appliance without prior authorization from FPI may void this warranty.

Limitations of Liability:
The original purchaser's exclusive remedy under this warranty, and FPI's sole obligation under this warranty, express or implied, in contract or in tort, shall be limited to replacement, repair, or refund, as outlined above. IN NO EVENT WILL FPI BE LIABLE UNDER THIS WARRANTY FOR ANY INCIDENTAL OR CONSEQUENTIAL COMMERCIAL DAMAGES OR DAMAGES TO PROPERTY. TO THE EXTENT PERMITTED BY APPLICABLE LAW, FPI MAKES NO EXPRESS WARRANTIES OTHER THAN THE WARRANTY SPECIFIED HEREIN. THE DURATION OF ANY IMPLIED WARRANTY IS LIMITED TO DURATION OF THE EXPRESSED WARRANTY SPECIFIED ABOVE. IF IMPLIED WARRANTIES CANNOT BE DISCLAIMED, THEN SUCH WARRANTIES ARE LIMITED IN DURATION TO THE DURATION OF THIS WARRANTY.

Some U.S. states do not allow limitations on how long an implied warranty lasts, or allow exclusion or limitation of incidental or consequential damages, so the above limitations or exclusions may not apply to you.

Customers located outside the U.S. should consult their local, provincial or national legal codes for additional terms which may be applicable to this warranty.

How to Obtain Warranty Service:
Customers should contact the authorized selling dealer to obtain warranty service. In the event the authorized selling dealer is unable to provide warranty service, please contact FPI by mail at the address listed below. Please include a brief description of the problem and your address, email and telephone contact information. A representative will contact you to make arrangements for an inspection and/or warranty service.

Canadian Warrantor:

FPI Fireplace Products International Ltd.
6988 Venture St.
Delta, British Columbia
Canada, V4G 1H4

U.S. Warrantor:

Fireplace Products U.S., Inc.
PO Box 2189 PMB 125
Blaine, WA
United States, 98231

Or contact the Regency Customer Care Centre at 1-800-442-7432 (phone) / 604-946-4349 (fax)

Product Registration and Customer Support:
Thank you for choosing a Regency Fireplace. Regency strives to be a world leader in the design, manufacture, and marketing of hearth products. To provide the best support for your product, we request that you complete a product registration form at http://www.regency-fire.com/Customer-Care/Warranty-Registration.aspx within ninety (90) days of purchase.

Product Registration and Customer Support:

Thank you for choosing a Regency Fireplace. Regency strives to be a world leader in the design, manufacture, and marketing of hearth products. To provide the best support for your product, we request that you complete a product registration form found on our Web Site under Customer Care within ninety (90) days of purchase.

For purchases made in **CANADA or the UNITED STATES**:
http://www.regency-fire.com/Customer-Care/Warranty-Registration.aspx

For purchases made in AUSTRALIA:
http://www.regency-fire.com.au/Customer-Care/Warranty-Registration.aspx

You may also complete the warranty registration form below to register your Regency Fireplace Product and mail and/or fax it back to us, and we will register the warranty for you. It is important you provide us with all the information below in order for us to serve you better.

Warranty Registration Form (or Register online immediately at the above Web Site):

Warranty Details	
Serial Number (required):	
Purchase Date (required) (mm/dd/yyyy):	
Product Details	
Product Model (required):	
Dealer Details	
Dealer Name (required):	
Dealer Address:	
Dealer Phone #:	
Installer:	
Date Installed (mm/dd/yyyy):	
Your Contact Details (required)	
Name:	
Address:	
Phone:	
Email:	

For purchases made in CANADA:

FPI Fireplace Products International Ltd.
6988 Venture St.
Delta, British Columbia
Canada, V4G 1H4

Phone: 604-946-5155
Fax: 604-946-4349

For purchases made in the UNITED STATES:

Fireplace Products U.S., Inc.
PO Box 2189 PMB 125
Blaine, WA
United States, 98231

Phone: 604-946-5155
Fax: 604-946-4349

For purchases made in AUSTRALIA:

Fireplace Products Australia Pty Ltd
1- 3 Conquest Way
Hallam, VIC
Australia, 3803

Phone: +61 3 9799 7277
Fax: +61 3 9799 7822

For fireplace care and tips and answers to most common questions please visit our Customer Care section on our Web Site. Please feel free to contact your selling dealer if you have any questions about your Regency product.

Installer: Please complete the following information

Dealer Name & Address:_____

_____

Installer: _____

Phone #: _____

Date Installed: _____

Serial No.:_____

Greeenfire® is a trademark of Fireplace Products International Ltd.
© Copyright 2018 Regency Fireplace Products. All rights reserved.

Printed in Canada